US009410525B2

(12) **United States Patent**
Powell et al.

(10) **Patent No.: US 9,410,525 B2**
(45) **Date of Patent: Aug. 9, 2016**

(54) **VALVE CONTROLLED COMBUSTION SYSTEM**

(71) Applicant: **DENSO International America, Inc.**, Southfield, MI (US)

(72) Inventors: **Patrick Powell**, Farmington Hills, MI (US); **Michael Bima**, Milford, MI (US)

(73) Assignee: **Denso International America, Inc.**, Southfield, MI (US)

(*) Notice: Subject to any disclaimer, the term of this patent is extended or adjusted under 35 U.S.C. 154(b) by 249 days.

(21) Appl. No.: **13/960,912**

(22) Filed: **Aug. 7, 2013**

(65) **Prior Publication Data**

US 2015/0040851 A1 Feb. 12, 2015

(51) **Int. Cl.**

F02P 23/04	(2006.01)
H01T 13/00	(2006.01)
F02P 9/00	(2006.01)
F02P 15/00	(2006.01)
H01T 13/30	(2006.01)
H01T 21/02	(2006.01)
H01T 13/26	(2006.01)
H01T 13/50	(2006.01)

(52) **U.S. Cl.**

CPC ***F02P 9/002*** (2013.01); ***F02P 15/006*** (2013.01); ***H01T 13/00*** (2013.01); ***H01T 13/30*** (2013.01); ***H01T 21/02*** (2013.01); *H01T 13/26* (2013.01); *H01T 13/50* (2013.01)

(58) **Field of Classification Search**

CPC F02P 23/04; F02P 23/045; F02P 9/002; F02P 15/006; H01T 13/00; H01T 21/02

See application file for complete search history.

(56) **References Cited**

U.S. PATENT DOCUMENTS

2,872,496	A *	2/1959	Chen	123/169 R
4,221,174	A	9/1980	Smith et al.	
4,397,273	A *	8/1983	Folkerts	F23Q 7/001 123/145 A
4,529,373	A	7/1985	Ortlinghaus	
4,726,336	A *	2/1988	Hoppie	F02P 23/04 123/143 B
4,898,126	A	2/1990	Merritt	
5,144,924	A	9/1992	Paro	
5,329,901	A	7/1994	Onishi	
5,522,357	A	6/1996	Nogi et al.	
6,325,039	B1	12/2001	Goto	
6,925,983	B2	8/2005	Herden et al.	
7,281,514	B2	10/2007	Hill et al.	
2008/0264371	A1*	10/2008	Taido et al.	123/143 B
2009/0314233	A1*	12/2009	Zajac	F02B 41/08 123/58.9
2012/0282555	A1	11/2012	Cody et al.	

FOREIGN PATENT DOCUMENTS

EP	0020280	12/1980
EP	1033535	3/1999

(Continued)

Primary Examiner — Lindsay Low
Assistant Examiner — Jacob Amick
(74) *Attorney, Agent, or Firm* — Harness, Dickey & Pierce, P.L.C.

(57) **ABSTRACT**

An internal combustion engine combustion system, including an ignition element and an ignition actuation member. The ignition element is configured to ignite an air-fuel mixture compressed within a combustion chamber of an internal combustion engine. The ignition actuation member is movable between a first position in which the ignition actuation member prevents ignition of the air-fuel mixture when present in the combustion chamber, and a second position in which the ignition actuation member permits ignition of the air-fuel mixture by exposing the ignition element to the air-fuel mixture when the air-fuel mixture is present in the combustion chamber.
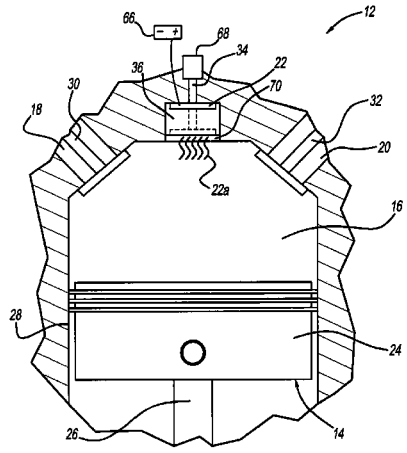
4 Claims, 7 Drawing Sheets