US009409325B2

(12) **United States Patent**
Stodgel

(10) **Patent No.: US 9,409,325 B2**
(45) **Date of Patent: Aug. 9, 2016**

(54) **MOLDING SYSTEM AND METHOD HAVING DUAL SPLIT RING PLUNGER**

(71) Applicant: **Caterpillar Inc.**, Peoria, IL (US)

(72) Inventor: **Andrew R. Stodgel**, Boonville, MO (US)

(73) Assignee: **Caterpillar Inc.**, Peoria, IL (US)

(*) Notice: Subject to any disclaimer, the term of this patent is extended or adjusted under 35 U.S.C. 154(b) by 4 days.

(21) Appl. No.: **14/508,478**

(22) Filed: **Oct. 7, 2014**

(65) **Prior Publication Data**

US 2016/0096295 A1 Apr. 7, 2016

(51) **Int. Cl.**

B29C 45/36	(2006.01)
B29C 43/36	(2006.01)
B29C 45/58	(2006.01)
B29C 45/02	(2006.01)

(52) **U.S. Cl.**

CPC ***B29C 43/361*** (2013.01); ***B29C 45/586*** (2013.01); *B29C 45/02* (2013.01)

(58) **Field of Classification Search**

CPC B29C 45/02; B29C 45/021; B29C 45/022; B29C 45/025; B29C 45/586; B29C 43/361; B29C 2045/024

USPC 425/544

See application file for complete search history.

(56) **References Cited**

U.S. PATENT DOCUMENTS

2,482,338	A	9/1949	Hall
3,405,214	A	10/1968	Butts
3,647,337	A	3/1972	Dega
4,723,899	A	2/1988	Osada

FOREIGN PATENT DOCUMENTS

JP	62-039214	A	2/1987
JP	4240258	B2	3/2009

Primary Examiner — Alison L Hindenlang
Assistant Examiner — Mohamed K Ahmed Ali
(74) *Attorney, Agent, or Firm* — Baker & Hostetler LLP

(57) **ABSTRACT**

A plunger is provided. The plunger includes a top plat and a bottom plate coupled to the top plate. A first split ring is provided between the top plate and the bottom plate and is coupled to the top plate. A second split ring is provided between the first split ring and the bottom plate and is coupled to the first split ring.
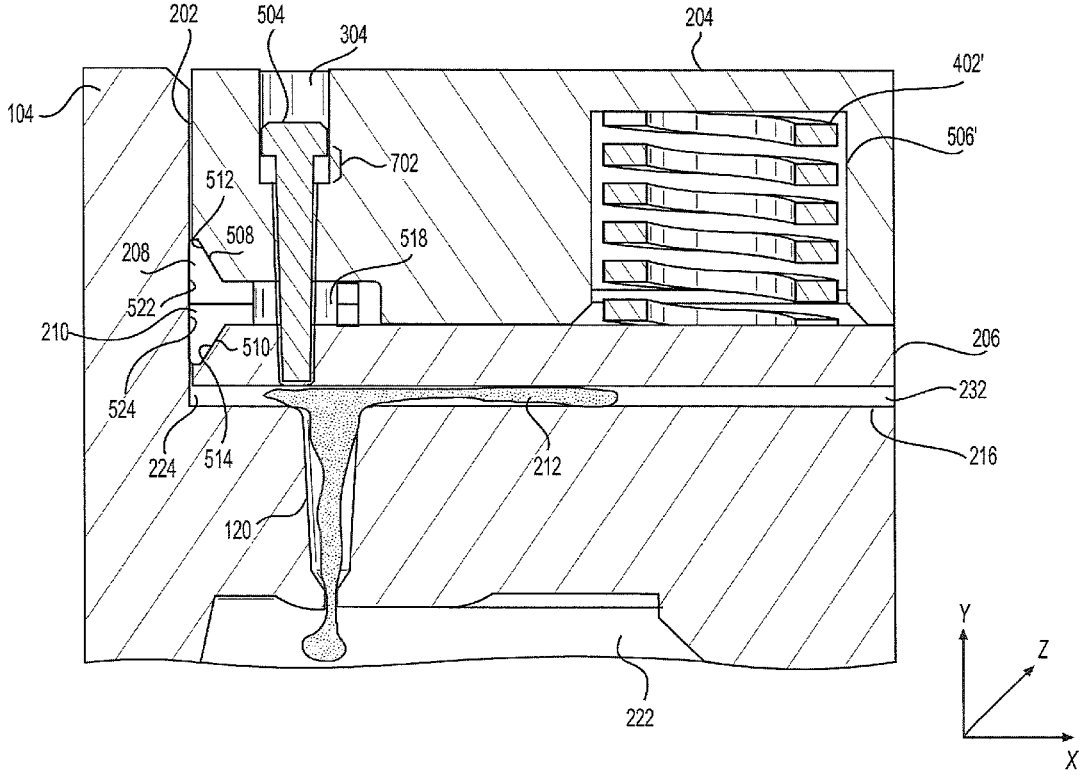
19 Claims, 12 Drawing Sheets