May 24, 1955 T. W. SCOTT 2,709,025

DISPENSER FOR MEASURED QUANTITY OF PASTE

Filed March 30, 1953

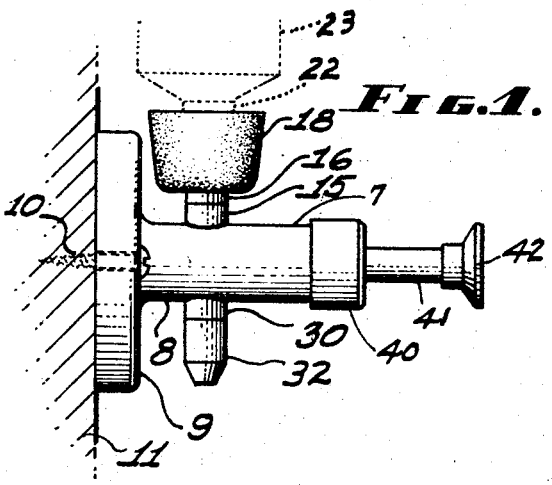

FIG. 1.

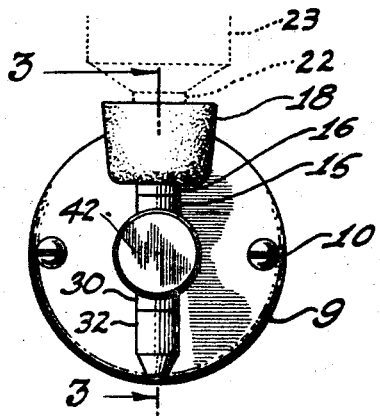

FIG. 2.

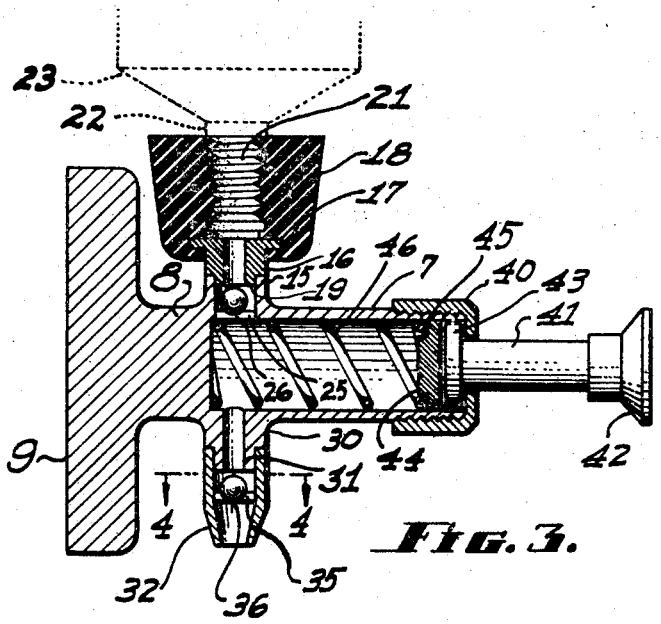

FIG. 3.

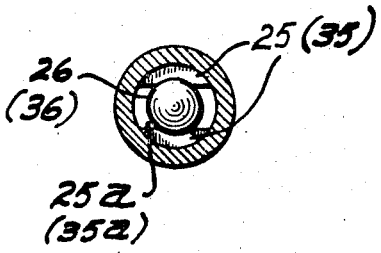

FIG. 4.

Thomas W. Scott,
INVENTOR

By G. L. Warlow
ATTORNEY