US009408725B2

(12) **United States Patent**
Ingimarsson

(10) **Patent No.: US 9,408,725 B2**
(45) **Date of Patent: Aug. 9, 2016**

(54) **PROSTHETIC PIN LOCKING MECHANISM WITH VACUUM TUNNELS**

(71) Applicant: **OSSUR HF**, Reykjavik (IS)

(72) Inventor: **Gudni Ingimarsson**, Reykjavik (IS)

(73) Assignee: **OSSUR HF**, Reykjavik (IS)

(*) Notice: Subject to any disclaimer, the term of this patent is extended or adjusted under 35 U.S.C. 154(b) by 0 days.

(21) Appl. No.: **14/321,379**

(22) Filed: **Jul. 1, 2014**

(65) **Prior Publication Data**

US 2015/0012112 A1 Jan. 8, 2015

Related U.S. Application Data

(60) Provisional application No. 61/842,665, filed on Jul. 3, 2013.

(51) **Int. Cl.**
A61F 2/80 (2006.01)
A61F 2/78 (2006.01)

(52) **U.S. Cl.**
CPC ... ***A61F 2/80*** (2013.01); ***A61F 2/78*** (2013.01); *A61F 2002/7875* (2013.01); *A61F 2002/802* (2013.01); *A61F 2002/805* (2013.01)

(58) **Field of Classification Search**
CPC A61F 2/80; A61F 2002/7875; A61F 2002/802; A61F 2002/805; A61F 2002/807
See application file for complete search history.

(56) **References Cited**

U.S. PATENT DOCUMENTS

5,888,234 A 3/1999 Littig
6,063,125 A 5/2000 Arbogast et al.
6,136,039 A 10/2000 Kristinsson et al.
6,334,876 B1 1/2002 Perkins
6,605,118 B2 8/2003 Capper et al.
6,626,952 B2 9/2003 Janusson et al.
6,926,742 B2 8/2005 Caspers et al.
7,118,602 B2 10/2006 Bjarnason
7,427,298 B1 9/2008 Swanson, Sr.
7,438,843 B2 10/2008 Asgeirsson
7,927,377 B2 * 4/2011 Slemker A61F 2/78 623/34
8,097,043 B2 1/2012 Egilsson
8,182,547 B2 5/2012 King
8,211,187 B2 7/2012 Slemker et al.
2011/0022183 A1 1/2011 Slemker et al.
2011/0307080 A1 12/2011 Perkins et al.
2012/0109336 A1 5/2012 Laghi
2013/0289742 A1 10/2013 Halldorsson et al.

FOREIGN PATENT DOCUMENTS

DE 10 2011 116 280 A1 4/2013
WO 84/00881 A1 3/1984

OTHER PUBLICATIONS

International Search Report from Corresponding International Application No. PCT/US2014/045058, Oct. 6, 2014.

* cited by examiner

Primary Examiner — Bruce E Snow
(74) *Attorney, Agent, or Firm* — Workman Nydegger

(57) **ABSTRACT**

A pin lock for a prosthetic device in a vacuum assisted suspension system includes a pin defining a longitudinally elongate bore and at least one passageway extending obliquely relative to the bore and communicating therewith at a proximal end of the pin. The pin lock also includes a locking mechanism having a receiving port arranged to receive the pin and a channel located at a distal end of the receiving port and adapted to communicate with the bore to exhaust air through the pin therefrom.
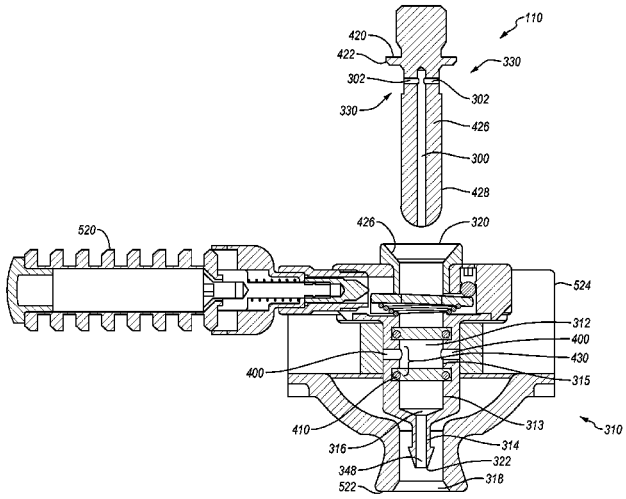
20 Claims, 7 Drawing Sheets