US004794724B1

REEXAMINATION CERTIFICATE (3878th)

United States Patent [19] [11] **B1 4,794,724**

Peters [45] Certificate Issued **Sep. 21, 1999**

[54] **CONTAINMENT TYPE INSECT TRAP**

[75] Inventor: **Charles W. Peters**, Eugene, Oreg.

[73] Assignee: **Oak Stump Farm, Inc.**, Eugene, Oreg.

Reexamination Request:
No. 90/004,824, Nov. 3, 1997

Reexamination Certificate for:

Patent No.:	**4,794,724**
Issued:	**Jan. 3, 1989**
Appl. No.:	**07/186,917**
Filed:	**Apr. 27, 1988**

[51] **Int. Cl.**[6] **A01M 1/10**
[52] **U.S. Cl.** **43/122**; 43/107
[58] **Field of Search** 43/122, 121

[56] **References Cited**

U.S. PATENT DOCUMENTS

352,289	11/1886	Barnes et al.	43/121
554,616	2/1896	Cook	43/121
649,484	5/1900	Schlachter	43/121
882,306	3/1908	Frederickson .	
1,018,277	2/1912	Suhre	43/121
1,277,354	9/1918	Arabian .	
1,327,230	1/1920	Fairbanks	43/121
1,364,949	1/1921	Niewinski .	
1,485,867	3/1924	Mooney	43/121
2,046,430	7/1936	Rutherford .	
2,997,806	8/1961	Duvall	43/121
3,619,934	11/1971	Tunstall	43/121
3,803,753	4/1974	Feigin et al. .	
3,885,341	5/1975	Kuchenbecker	43/121
3,911,612	10/1975	Sorenson et al. .	
3,997,999	12/1976	Evans .	
4,263,740	4/1981	Hemsarth	43/121
4,349,981	9/1982	Sherman .	
4,360,987	11/1982	Lowder .	
4,364,194	12/1982	Clark, Sr. .	
4,400,904	8/1983	Baker .	
4,485,582	12/1984	Morris .	
4,581,845	4/1986	Burkholder et al. .	
4,638,592	1/1987	Schneidmiller .	

Primary Examiner—Kurt Rowan

[57] **ABSTRACT**
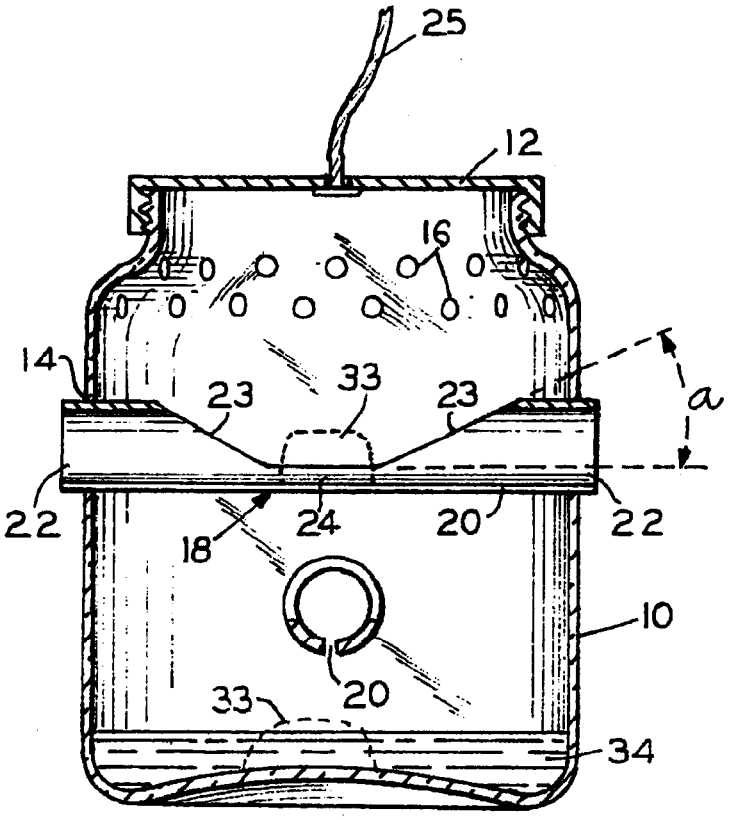
An insect trap, particularly a yellow jacket trap of improved efficiency has novel combination entryway and bait tray elements supported in its side walls. It also has provision for containing both liquid and solid insect bait in its bottom portion. Insects entering the trap after eating the bait, fail to find their way out, fly to exhaustion, and drown in the pool of liquid at the bottom of the trap.