May 7, 1957 H. D. KNOOP ET AL 2,791,324

COMPARTMENTED PACKAGE

Filed Sept. 28, 1953

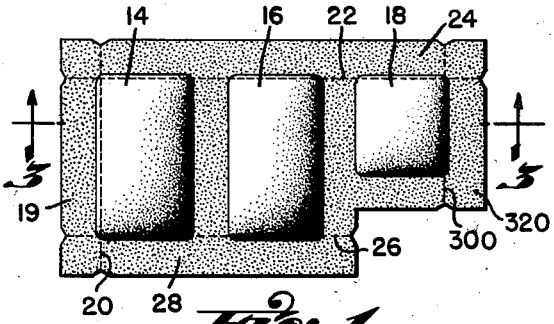

Fig. 1

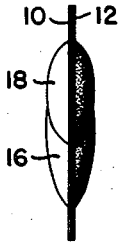

Fig. 2

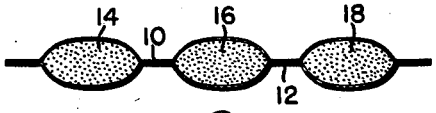

Fig. 3

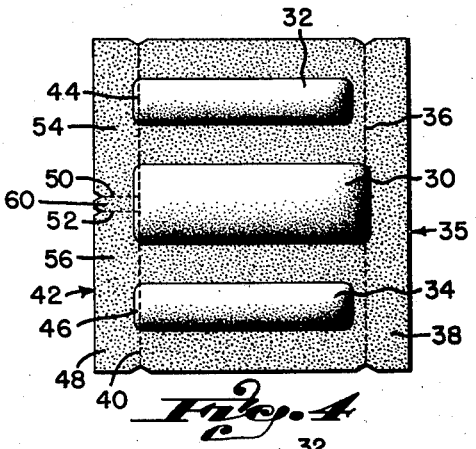

Fig. 4

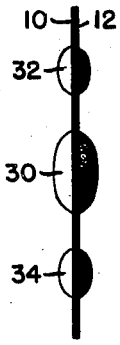

Fig. 5

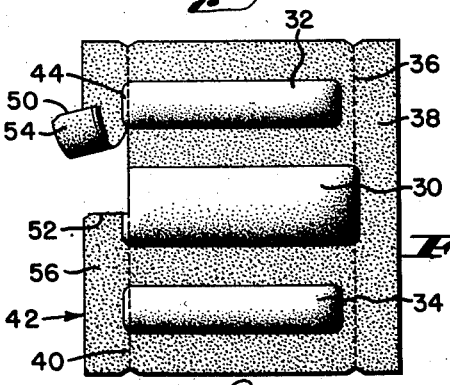

Fig. 6

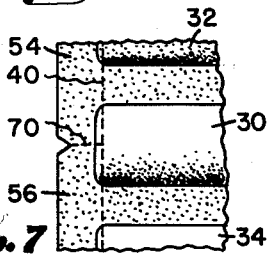

Fig. 7

INVENTORS
HERBERT DOW KNOOP
JOHN W. KINNEY, Jr.
BY
J. Warren Kinney, Jr.
ATTORNEY