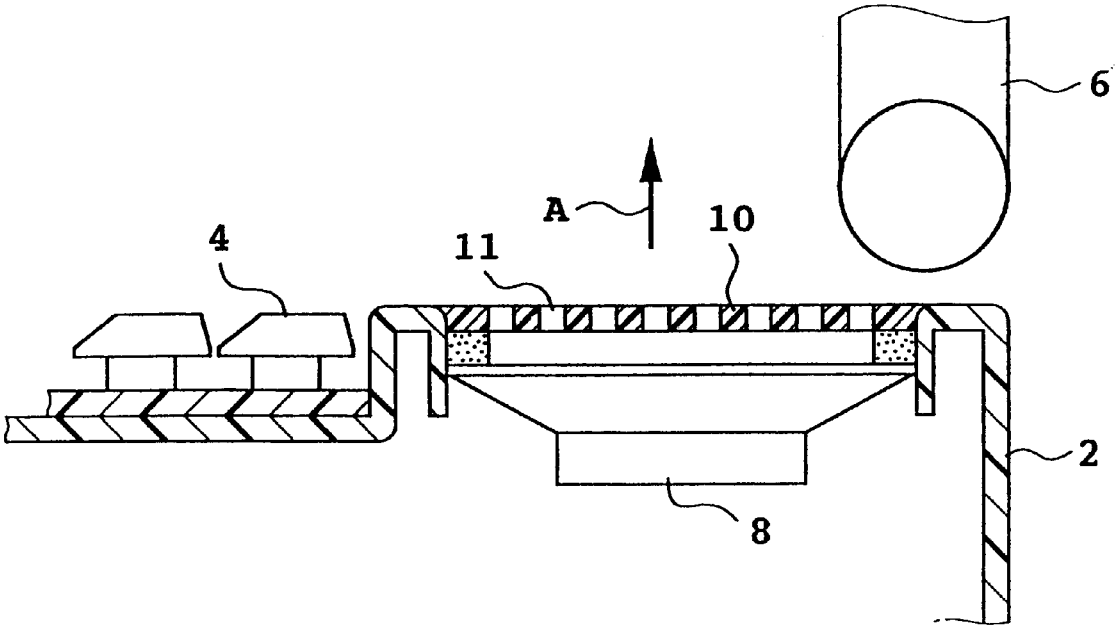FIG. 1
PRIOR ART