Sept. 15, 1964 A. W. BALDWIN 3,148,624

HYDRAULIC PUMP

Filed June 21, 1961 2 Sheets-Sheet 1

FIG. 1

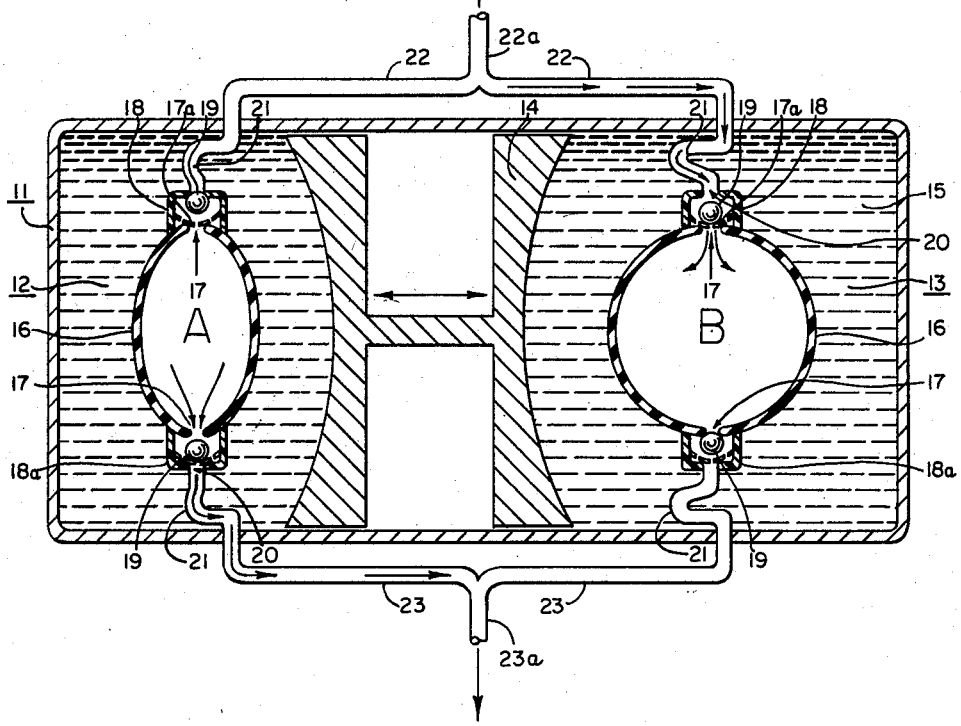

FIG. 2

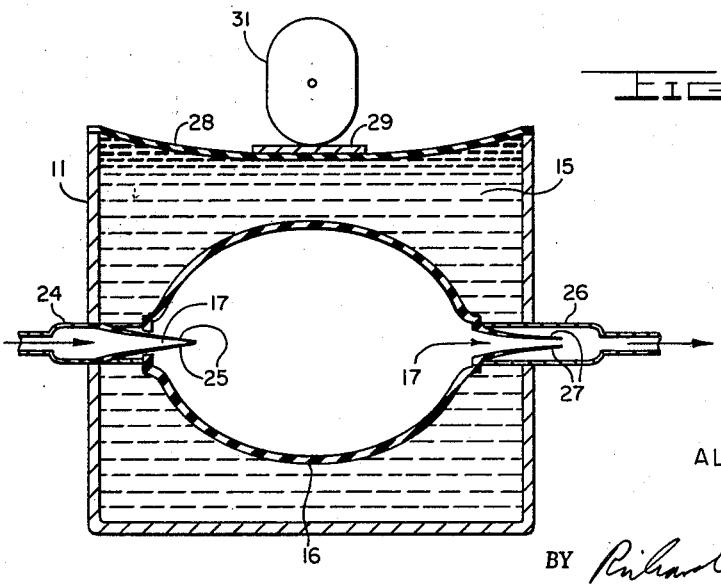

INVENTOR
ALAN W. BALDWIN

BY Richard C. Reed

ATTORNEY