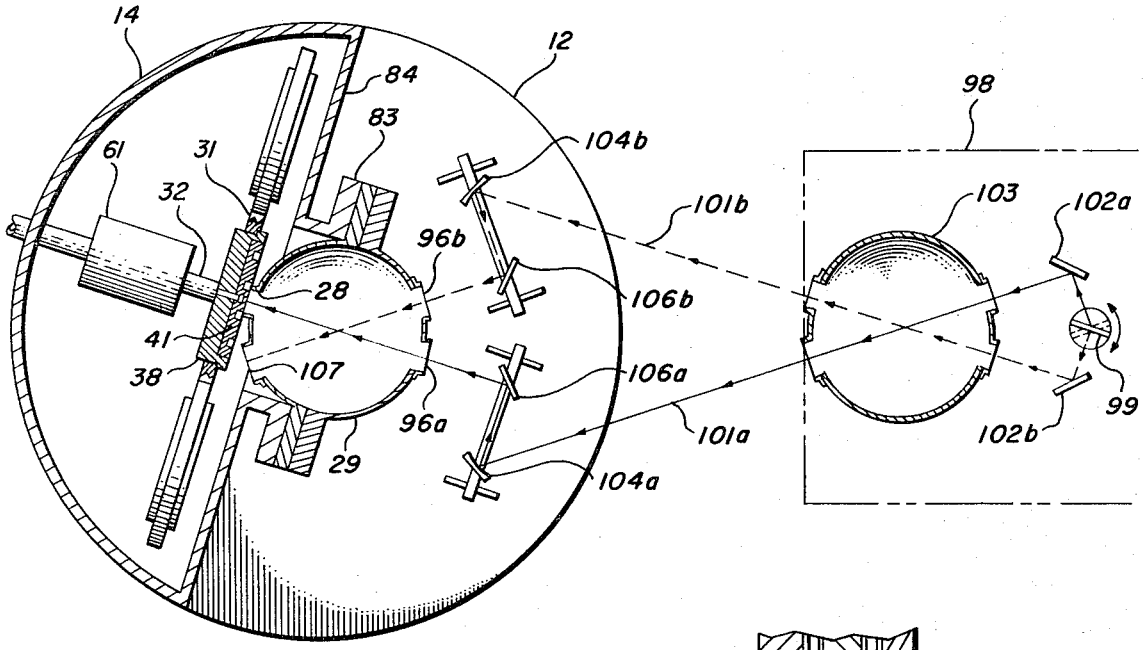

FIG. 8

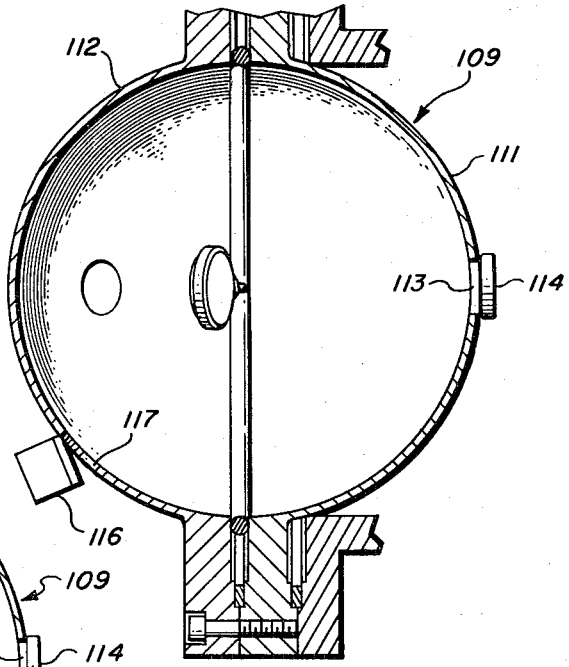

FIG. 11

FIG. 10

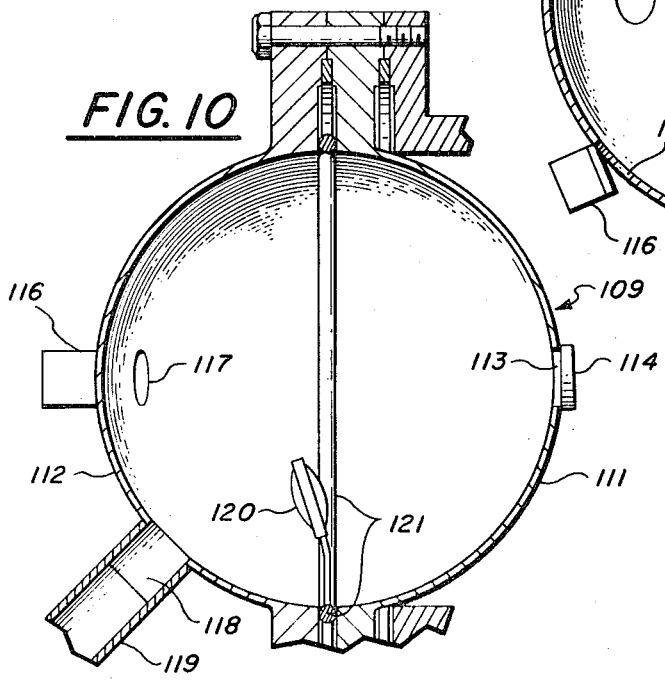

INVENTORS.
ELMER R. BEEVER
RINDGE SHIMA
PAUL P. ZEBUS
BY
Allan Rothenberg
ATTORNEY