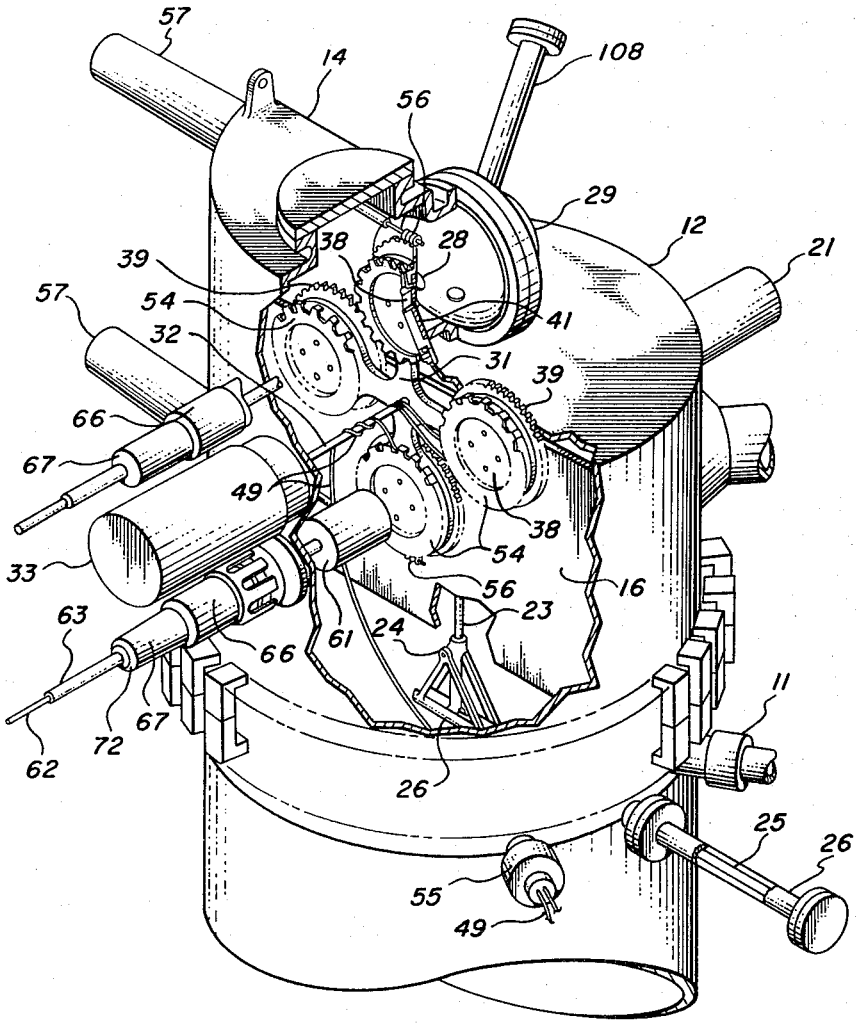

FIG. 2

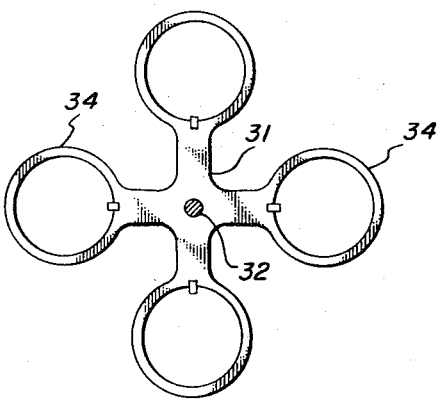

FIG. 3

INVENTORS.
ELMER R. BEEVER
RINDGE SHIMA
PAUL P. ZEBUS
BY Allen Rothenberg
ATTORNEY