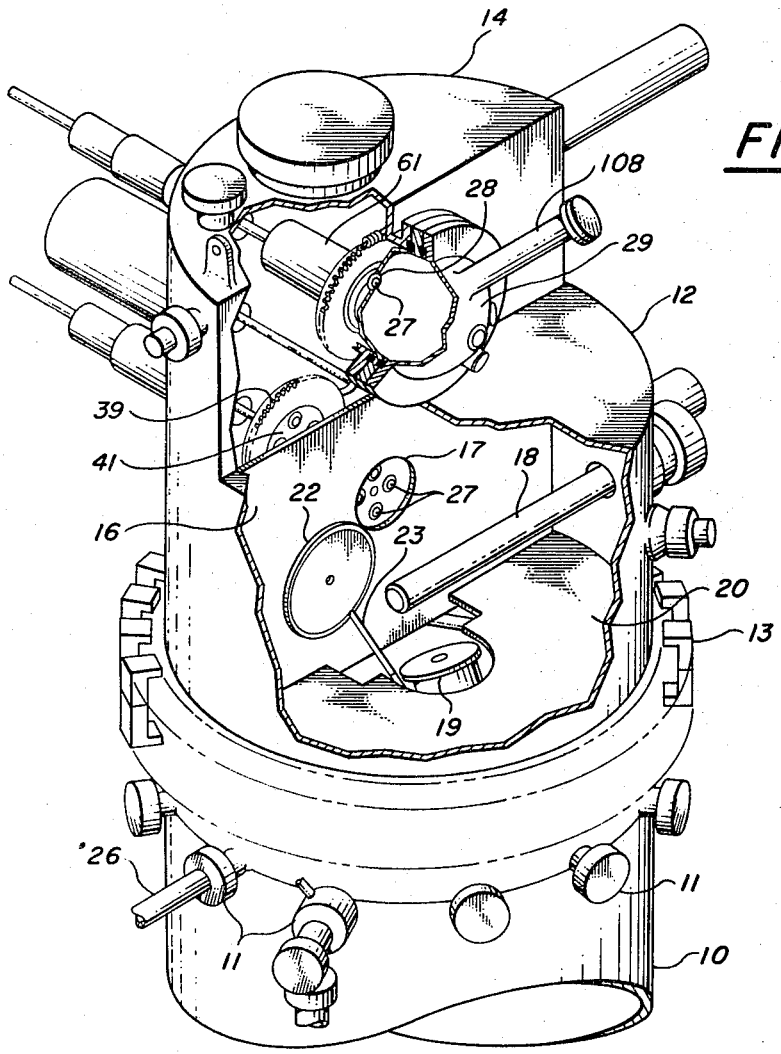

FIG. 1

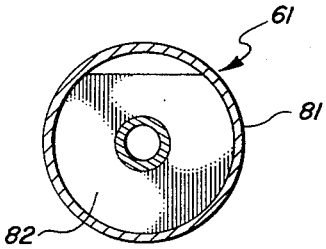

FIG. 7

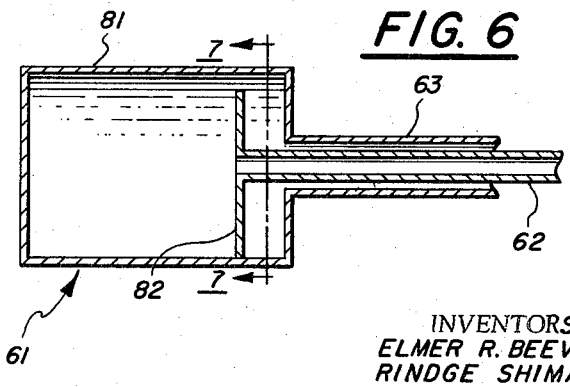

FIG. 6

INVENTORS.
ELMER R. BEEVER
RINDGE SHIMA
PAUL P. ZEBUS
BY
Albert Rothenberg
ATTORNEY