US009636124B2

(12) **United States Patent**
Mantell

(10) **Patent No.: US 9,636,124 B2**
(45) **Date of Patent: May 2, 2017**

(54) **UNFOCUSED ELECTROHYDRAULIC LITHOTRIPTER**

(71) Applicant: **Northgate Technologies Inc.**, Elgin, IL (US)

(72) Inventor: **Robert Mantell**, Arlington Heights, IL (US)

(73) Assignee: **Northgate Technologies Inc.**, Elgin, IL (US)

(*) Notice: Subject to any disclaimer, the term of this patent is extended or adjusted under 35 U.S.C. 154(b) by 300 days.

(21) Appl. No.: **14/204,310**

(22) Filed: **Mar. 11, 2014**

(65) **Prior Publication Data**

US 2014/0257323 A1 Sep. 11, 2014

Related U.S. Application Data

(60) Provisional application No. 61/775,907, filed on Mar. 11, 2013.

(51) **Int. Cl.**
A61B 17/22 (2006.01)

(52) **U.S. Cl.**
CPC ***A61B 17/22022*** (2013.01); *A61B 2017/22025* (2013.01); *A61B 2017/22028* (2013.01)

(58) **Field of Classification Search**
CPC A61B 17/22022; A61B 2017/22025; A61B 2017/22028
See application file for complete search history.

(56) **References Cited**

U.S. PATENT DOCUMENTS

4,191,189	A	3/1980	Barkan	
4,203,429	A	5/1980	Vasilevsky et al.	
4,577,255	A	3/1986	Martin	
4,595,019	A	6/1986	Shene et al.	
4,927,427	A	5/1990	Kriauciunas et al.	
4,928,672	A *	5/1990	Grasser	A61B 17/2258 601/4
5,152,768	A	10/1992	Bhatta	
5,224,468	A	7/1993	Grunewald et al.	
5,540,702	A	7/1996	Walz	
6,319,261	B1	11/2001	Bowers	
6,726,681	B2	4/2004	Grasso, III et al.	
6,893,450	B2	5/2005	Foster	
7,087,061	B2	8/2006	Chernenko et al.	
7,104,983	B2	9/2006	Grasso, III et al.	
7,189,209	B1	3/2007	Ogden et al.	
7,364,554	B2	4/2008	Bolze et al.	
7,867,178	B2	1/2011	Simnacher	
7,985,189	B1	7/2011	Ogden et al.	
7,988,631	B2	8/2011	Bohris	
8,088,073	B2	1/2012	Simnacher et al.	
8,092,401	B2	1/2012	Schultheiss	
2007/0239082	A1	10/2007	Schultheiss et al.	

(Continued)

Primary Examiner — Ashley Fishback
(74) *Attorney, Agent, or Firm* — Brinks Gilson & Lione

(57) **ABSTRACT**

Electrohydraulic lithotripters comprising a plurality of electrohydraulic probes are disclosed. Each probe of the plurality of probes comprise a first electrode and a second electrode positioned at a distal end of the probe such that when the probe is discharged, an electric arc between the first electrode and the second electrode produces a shockwave that radiates from the distal end of the probe. A first probe and a second probe of the plurality of probes may be configured to discharge simultaneously or sequentially.
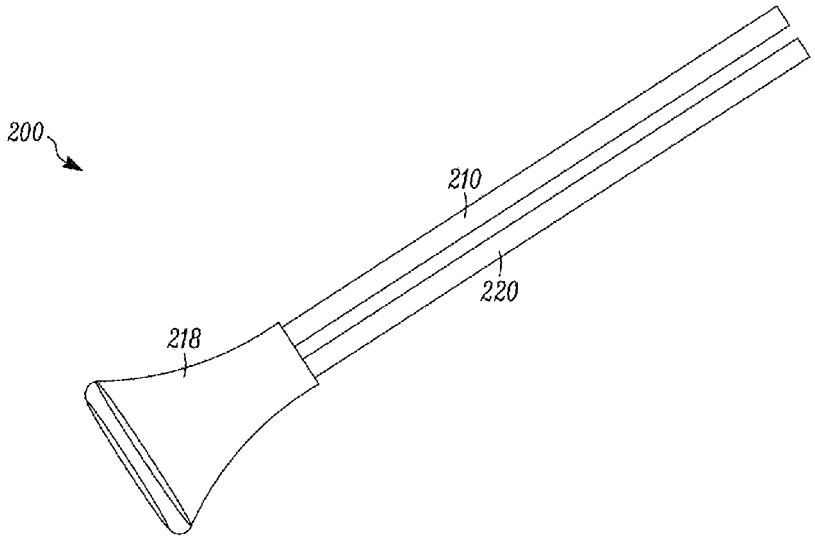
20 Claims, 14 Drawing Sheets