United States Patent [19]

Japuntich

[11] **Patent Number: 4,827,924**

[45] **Date of Patent: May 9, 1989**

[54] **HIGH EFFICIENCY RESPIRATOR**

[75] Inventor: **Daniel A. Japuntich**, St. Paul, Minn.

[73] Assignee: **Minnesota Mining and Manufacturing Company**, St. Paul, Minn.

[21] Appl. No.: **22,258**

[22] Filed: **Mar. 2, 1987**

[51] **Int. Cl.**[4] **A62B 7/10**

[52] **U.S. Cl.** **428/206.12**; 128/206.16; 128/206.19; 128/206.21

[58] **Field of Search** 178/206.19, 206.12, 178/205.29, 205.27, 206.13, 206.14, 206.15, 206.16, 206.17, 206.18, 206.21

[56] **References Cited**

U.S. PATENT DOCUMENTS

Re. 24,549	10/1958	Haliczer	128/141
3,500,825	3/1970	Anderson et al.	128/139
3,603,315	9/1971	Becker	128/146.2
3,664,335	5/1972	Boucher et al.	128/146.6
3,971,373	7/1976	Braun	128/206.19
3,985,132	10/1976	Boyce et al.	128/146.2
4,215,682	8/1980	Kubic et al.	128/206.19
4,248,220	2/1981	White	128/206.19
4,300,549	11/1981	Parker	128/206.19
4,417,575	11/1983	Hilton et al.	128/206.19
4,419,994	12/1913	Hilton	128/206.19
4,600,002	7/1986	Maryyanek et al.	128/206.19
4,606,341	8/1986	Hubbard et al.	128/206.19
4,641,645	2/1987	Tayebi	128/206.19
4,643,182	2/1987	Klein	128/206.19
4,684,570	8/1987	Maloney	128/206.19

FOREIGN PATENT DOCUMENTS

0149590A3	4/1986	European Pat. Off. .	
1589181	5/1981	United Kingdom	128/206.19
2077112	12/1981	United Kingdom	128/206.12

Primary Examiner—Edward M. Coven
Assistant Examiner—J. P. Lacyk
Attorney, Agent, or Firm—Donald M. Sell; Walter N. Kirn; Roger R. Tamte

[57] **ABSTRACT**

The invention provides a filtration face mask which has an expanded filtration surface area and high filter efficiency. The mask includes at least two sidewall portions generally extending away from the face of the wearer and away from an annular base. A frontal portion bridges the sidewall portions and at least two supporting arche structures are disposed at the junction of the sidewall and frontal portions.
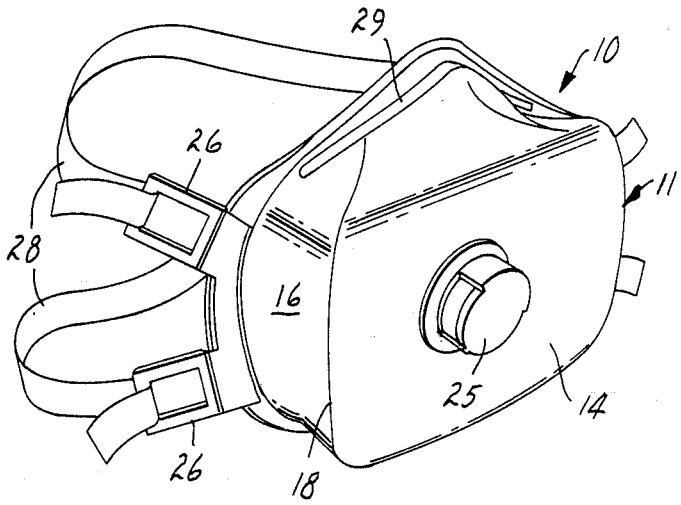
32 Claims, 2 Drawing Sheets