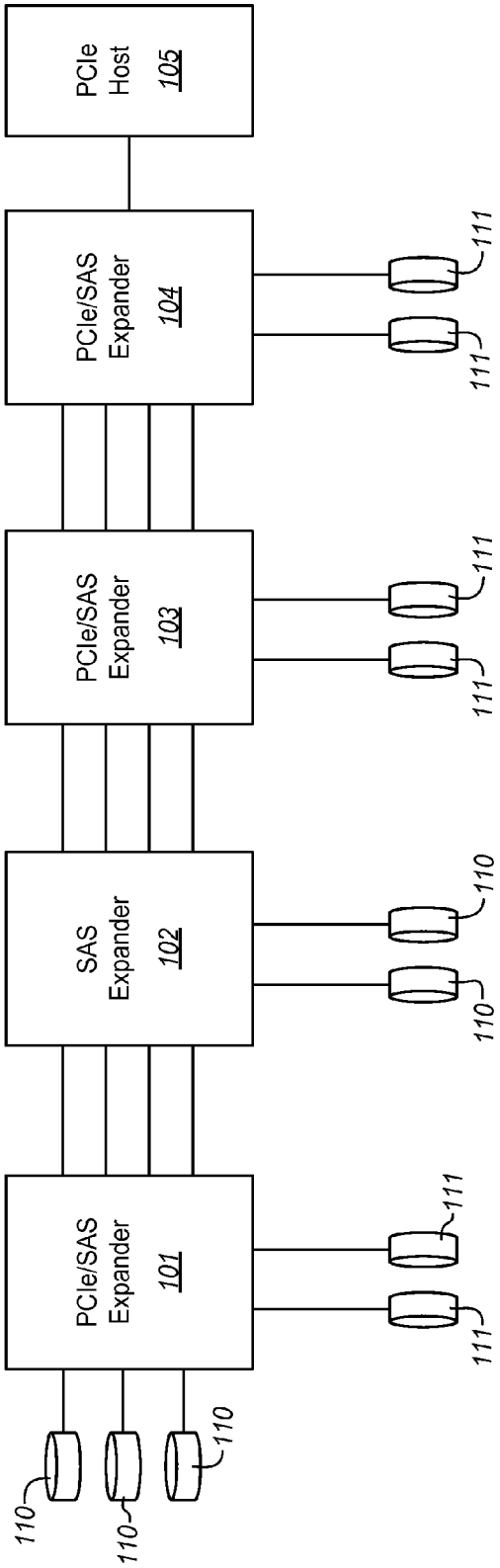
100
PCIe/SAS Expander 101
SAS Expander 102
PCIe/SAS Expander 103
PCIe/SAS Expander 104
PCIe Host 105
110
110
110
110
110
111
111
111
111
111
111

FIG. 1