US009918824B2

(12) **United States Patent**
Paul, Jr.

(10) **Patent No.: US 9,918,824 B2**
(45) **Date of Patent: Mar. 20, 2018**

(54) **BLOOD PERFUSION DEVICE DELIVERY SYSTEM**

(71) Applicant: **Cook Medical Technologies LLC**, Bloomington, IN (US)

(72) Inventor: **Ram H. Paul, Jr.**, Bloomington, IN (US)

(73) Assignee: **Cook Medical Technologies LLC**, Bloomington, IN (US)

(*) Notice: Subject to any disclaimer, the term of this patent is extended or adjusted under 35 U.S.C. 154(b) by 659 days.

(21) Appl. No.: **14/324,878**

(22) Filed: **Jul. 7, 2014**

(65) **Prior Publication Data**

US 2014/0324155 A1 Oct. 30, 2014

Related U.S. Application Data

(62) Division of application No. 13/197,074, filed on Aug. 3, 2011, now abandoned.

(Continued)

(51) **Int. Cl.**
A61F 2/06 (2013.01)
A61F 2/07 (2013.01)

(Continued)

(52) **U.S. Cl.**
CPC ***A61F 2/07*** (2013.01); ***A61F 2/06*** (2013.01); ***A61F 2/848*** (2013.01); ***A61F 2/86*** (2013.01);

(Continued)

(58) **Field of Classification Search**
CPC A61F 2/064; A61F 2/07; A61F 2/86; A61F 2/90; A61F 2/962; A61F 2/97; A61F 2002/061; A61F 2002/072; A61F 2002/075; A61F 2210/0004; A61F 2310/00389; A61F 2250/0031; A61F 2250/003; A61F 2/82;

(Continued)

(56) **References Cited**

U.S. PATENT DOCUMENTS

4,442,837 A 4/1984 Keatley
4,743,265 A 5/1988 Whitehouse et al.

(Continued)

FOREIGN PATENT DOCUMENTS

WO WO 2005/048880 A2 6/2005
WO WO 2008/138529 A1 11/2008

Primary Examiner — Jonathan Miles
Assistant Examiner — Kendra Obu
(74) *Attorney, Agent, or Firm* — Brinks Gilson & Lione

(57) **ABSTRACT**

A delivery system deploys a prosthesis for open surgical repair of a body vessel. The system includes a sleeve to retain segments of a prosthesis in a compressed configuration and retraction members. The sleeve has outer segments associated with each end of the prosthesis. Retraction of the retraction members removes the outer segments of the sleeve from the prosthesis outer ends to allow for expansion of the outer ends of the prosthesis in an outside-in direction. The system can include a handle and an actuation member movably attached to the handle. The actuation member is coupled to the sleeve outer segments so that movement of the actuation member corresponds to removal of the sleeve. The system can include elements to retain the sleeve outer segments to the actuation member and to redirect the retraction members to a direction different from the axis of the prosthesis.
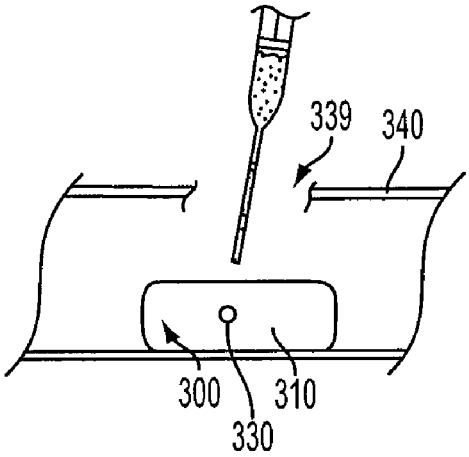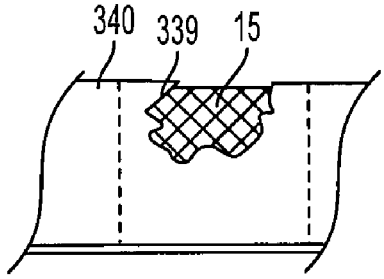
33 Claims, 6 Drawing Sheets