US009510924B2

(12) **United States Patent**
Shapiro et al.

(10) **Patent No.: US 9,510,924 B2**
(45) **Date of Patent: Dec. 6, 2016**

(54) **APPARATUS AND METHOD FOR INHIBITING STRESS URINARY INCONTINENCE**

(71) Applicant: **Floelle Inc.**, Acton, MA (US)

(72) Inventors: **Jerrold M. Shapiro**, Maynard, MA (US); **Cheri A. Grantham**, Willis, TX (US)

(73) Assignee: **Floelle Inc.**, Acton, MA (US)

(*) Notice: Subject to any disclaimer, the term of this patent is extended or adjusted under 35 U.S.C. 154(b) by 269 days.

(21) Appl. No.: **14/043,579**

(22) Filed: **Oct. 1, 2013**

(65) **Prior Publication Data**

US 2014/0128666 A1 May 8, 2014

Related U.S. Application Data

(63) Continuation of application No. PCT/US2012/031784, filed on Apr. 2, 2012.

(60) Provisional application No. 61/473,955, filed on Apr. 11, 2011.

(51) **Int. Cl.**
A61F 2/04 (2013.01)
A61F 2/00 (2006.01)

(52) **U.S. Cl.**
CPC ***A61F 2/0036*** (2013.01); ***A61F 2/0009*** (2013.01); *A61F 2/0013* (2013.01)

(58) **Field of Classification Search**
CPC A61F 2/00–2/004; A61B 2017/00805; A61B 2018/00523; A61B 17/12022; F16K 31/145; F16K 31/3855
USPC 600/29–31; 251/4–10, 61.1
See application file for complete search history.

(56) **References Cited**

U.S. PATENT DOCUMENTS

3,797,478 A * 3/1974 Walsh et al. 600/29
3,810,474 A * 5/1974 Cross A61M 16/04 128/207.15
4,813,935 A * 3/1989 Haber et al. 604/99.02
5,088,980 A * 2/1992 Leighton 600/30
5,234,409 A 8/1993 Goldberg et al.
(Continued)

FOREIGN PATENT DOCUMENTS

WO WO 9602214 A1 * 2/1996

OTHER PUBLICATIONS

International Preliminary Report on Patentability issued on Oct. 24, 2013 for corresponding PCT Application No. PCT/US2012/031784.

Primary Examiner — Charles A Marmor, II
Assistant Examiner — Thaddeus Cox
(74) *Attorney, Agent, or Firm* — Brian M. Dingman; Dingman IP Law, PC

(57) **ABSTRACT**

An apparatus (**60**) for use within a woman's urethra (**9**) for inhibiting urine outflow when her intra-abdominal pressure rises. The apparatus (**60**) includes a generally tubular device (**50**) having a proximal end and a distal end and defining a longitudinal axis. Device (**50**) comprises structure (**5**) that is constructed and arranged to define a longitudinal passageway (**14**) that extends entirely through the device (**50**) from the proximal end to the distal end. Structure (**5**) is further constructed and arranged to be altered via an increase in intra-abdominal pressure, from a first state in which the passageway (**14**) is open along its length and able to conduct urine to a second state in which the passageway (**14***a*) is more restricted or is closed off, to inhibit the passage of urine.
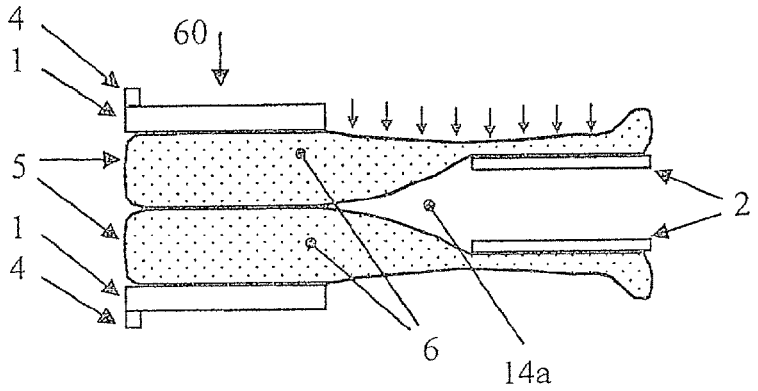
15 Claims, 7 Drawing Sheets