US009510724B2

(12) **United States Patent**
Bennett et al.

(10) **Patent No.: US 9,510,724 B2**
(45) **Date of Patent: Dec. 6, 2016**

(54) **DISHWASHER WITH MULTI-PIECE TUB**

(71) Applicant: **Whirlpool Corporation**, Benton Harbor, MI (US)

(72) Inventors: **Aaron P. Bennett**, Saint Joseph, MI (US); **Tod E. Boyd**, Findlay, OH (US); **Rexford W. Cordill**, Granger, IN (US); **Donald J. Wilson**, Stevensville, MI (US); **Marvin R. Mealman**, Benton Harbor, MI (US)

(73) Assignee: **Whirlpool Corporation**, Benton Harbor, MI (US)

(*) Notice: Subject to any disclaimer, the term of this patent is extended or adjusted under 35 U.S.C. 154(b) by 1027 days.

(21) Appl. No.: **13/622,435**

(22) Filed: **Sep. 19, 2012**

(65) **Prior Publication Data**

US 2013/0068266 A1 Mar. 21, 2013

Related U.S. Application Data

(60) Provisional application No. 61/537,302, filed on Sep. 21, 2011, provisional application No. 61/570,878, filed on Dec. 15, 2011.

(51) **Int. Cl.**
A47L 15/42 (2006.01)

(52) **U.S. Cl.**
CPC ***A47L 15/4219*** (2013.01); ***A47L 15/4246*** (2013.01); ***A47L 15/4272*** (2013.01); *A47L 15/4255* (2013.01); *Y10T 29/4998* (2015.01)

(58) **Field of Classification Search**
CPC A47L 15/4246; A47L 15/4255; A47L 15/4272; A47L 15/507; C08L 2666/06
USPC ..... 134/200, 201, 56 D, 57 D, 115 R, 105, 191,134/114; 312/228, 228.1, 311, 229, 406, 236, 312/204, 351.1, 406.2, 263; 220/592.1, 902, 220/675, 4.13, 592, 62
See application file for complete search history.

(56) **References Cited**

U.S. PATENT DOCUMENTS

3,091,946	A	6/1963	Kesling	
3,822,029	A	7/1974	Butsch	
3,826,553	A *	7/1974	Cushing	A47L 15/4246 312/229
3,862,880	A	1/1975	Feldman	
3,913,996	A	10/1975	Benford	
3,944,111	A	3/1976	Nonomaque et al.	
3,960,631	A	6/1976	Weiss et al.	
4,096,872	A	6/1978	Herbst et al.	
4,295,692	A *	10/1981	Jenkins	A47L 15/4246 134/200
4,476,183	A	10/1984	Holtrop et al.	

(Continued)

FOREIGN PATENT DOCUMENTS

DE	2016637	10/1971
DE	4319207 A1	12/1994

(Continued)

OTHER PUBLICATIONS

European Search Report for counterpart EP12185253.7, dated Jan. 28, 2016.

Primary Examiner — David Cormier
Assistant Examiner — Thomas Bucci

(57) **ABSTRACT**

A dishwasher having a treating chamber for receiving dishes for treatment according to an automatic treating cycle within the treating chamber that includes a shell partially defining the treating chamber and a base structure supporting the shell as well as a liquid recirculation system mounted to the base structure and configured to recirculate liquid within the treating chamber.
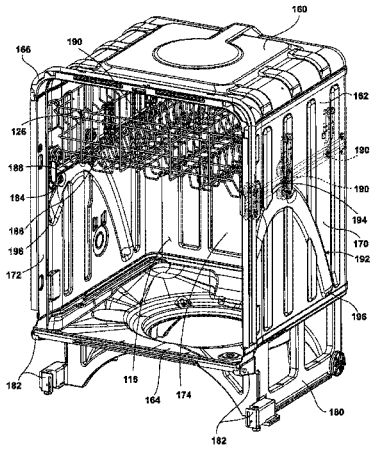
20 Claims, 12 Drawing Sheets