US009410624B2

(12) **United States Patent**
George

(10) **Patent No.: US 9,410,624 B2**
(45) **Date of Patent: Aug. 9, 2016**

(54) **BI-DIRECTIONAL CLIP SEAL PISTON**

(75) Inventor: **Philip George**, Wooster, OH (US)

(73) Assignee: **Schaeffler Technologies AG & Co. KG**, Herzogenaurach (DE)

(*) Notice: Subject to any disclaimer, the term of this patent is extended or adjusted under 35 U.S.C. 154(b) by 1280 days.

(21) Appl. No.: **13/313,151**

(22) Filed: **Dec. 7, 2011**

(65) **Prior Publication Data**

US 2012/0161400 A1 Jun. 28, 2012

Related U.S. Application Data

(60) Provisional application No. 61/426,085, filed on Dec. 22, 2010.

(51) **Int. Cl.**

F16D 21/00	(2006.01)
F16D 39/00	(2006.01)
F16J 1/00	(2006.01)
F15B 15/14	(2006.01)
F16D 25/08	(2006.01)
F16D 25/12	(2006.01)

(52) **U.S. Cl.**
CPC ***F16J 1/008*** (2013.01); ***F15B 15/1452*** (2013.01); ***F16D 25/082*** (2013.01); ***F16D 25/12*** (2013.01); *F16D 2300/08* (2013.01)

(58) **Field of Classification Search**
USPC 277/434, 435, 436, 437, 438, 439, 451; 192/48.619, 85.44, 85.54
See application file for complete search history.

(56) **References Cited**

U.S. PATENT DOCUMENTS

3,000,478	A *	9/1961	Carter	192/18 A
3,650,364	A *	3/1972	Laing	192/85.32
3,837,439	A *	9/1974	Piret	188/72.6
3,844,393	A *	10/1974	Zaiser	192/48.619
3,848,518	A *	11/1974	Martin	92/107
4,082,171	A *	4/1978	Lalin et al.	192/70.2
4,225,026	A *	9/1980	Yamamori et al.	192/70.2
4,450,944	A *	5/1984	Fujioka et al.	192/70.12
4,724,941	A *	2/1988	Wirkner	192/52.2
4,753,136	A *	6/1988	Hayakawa et al.	475/146
6,752,252	B2 *	6/2004	Ichikawa	192/85.41
7,063,197	B2 *	6/2006	Merkel et al.	192/85.24
7,140,481	B2 *	11/2006	Hagenow	192/85.42
8,056,692	B2	11/2011	George	
8,162,116	B2 *	4/2012	Nohl et al.	192/48.619
8,403,120	B2 *	3/2013	Voegtle et al.	192/48.611
8,607,948	B2 *	12/2013	Sturgin et al.	192/3.25
8,839,929	B2 *	9/2014	Kato et al.	192/48.619
2008/0277228	A1 *	11/2008	George	192/48.1
2014/0346737	A1 *	11/2014	Harris et al.	277/434

FOREIGN PATENT DOCUMENTS

DE	102008018210	11/2008
EP	0688970	12/1995
EP	1988304	11/2008

* cited by examiner

Primary Examiner — Kristina Fulton
Assistant Examiner — Eugene G Byrd
(74) *Attorney, Agent, or Firm* — Simpson & Simpson, PLLC

(57) **ABSTRACT**

A piston assembly, comprising: a back plate with an axially extending extrusion continuously circumferentially disposed about the back plate; a piston including an indent circumferentially disposed proximate an outer circumference for the piston plate; and a sealing element at least partially disposed in the indent. The piston is fixed to the back plate with a plurality of extruded rivets such that the extrusion forms a liquid-tight seal against a surface of the piston. The indent is open in an axial direction facing the back plate. The extrusion is radially inward of the plurality of extruded rivets.
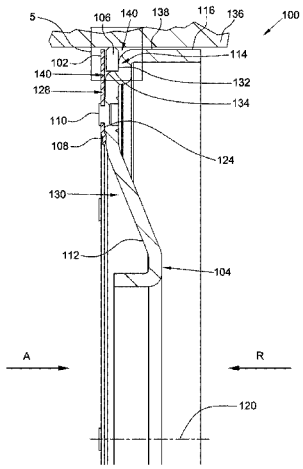
10 Claims, 4 Drawing Sheets