US009408724B2

(12) **United States Patent**
Perkins et al.

(10) **Patent No.: US 9,408,724 B2**
(45) **Date of Patent: Aug. 9, 2016**

(54) **AIR VALVE FOR EXTERNAL PROSTHESIS**

(71) Applicants: **Matt Perkins**, Boise, ID (US); **Travis Dean**, Boise, ID (US)

(72) Inventors: **Matt Perkins**, Boise, ID (US); **Travis Dean**, Boise, ID (US)

(73) Assignee: **Coyote Design and Manufacturing, Inc.**, Boise, ID (US)

(*) Notice: Subject to any disclaimer, the term of this patent is extended or adjusted under 35 U.S.C. 154(b) by 585 days.

(21) Appl. No.: **13/652,716**

(22) Filed: **Oct. 16, 2012**

(65) **Prior Publication Data**

US 2013/0282142 A1 Oct. 24, 2013

(51) **Int. Cl.**
A61F 2/80 (2006.01)

(52) **U.S. Cl.**
CPC ***A61F 2/80*** (2013.01); *A61F 2002/805* (2013.01)

(58) **Field of Classification Search**
CPC A61F 2/80; A61F 2002/805; A61F 2002/802
See application file for complete search history.

(56) **References Cited**

U.S. PATENT DOCUMENTS

1,586,015	A	5/1926	Underwood	
2,530,285	A	11/1950	Catranis	
2,533,404	A	12/1950	Sharp et al.	
2,790,180	A	4/1957	Hauser	
4,010,052	A	3/1977	Edwards	
4,106,745	A	8/1978	Carrow	
4,655,779	A	4/1987	Janowiak	
5,007,937	A	4/1991	Fishman et al.	
5,201,774	A	4/1993	Greene	
5,490,537	A	2/1996	Hill	
5,658,353	A	8/1997	Layton	
5,702,489	A *	12/1997	Slemker	A61F 2/80 623/34
5,709,017	A	1/1998	Hill	
5,807,303	A	9/1998	Bays	
6,287,345	B1	9/2001	Slemker et al.	
6,334,876	B1	1/2002	Perkins	
6,361,568	B1	3/2002	Hoerner	
6,436,149	B1 *	8/2002	Rincoe	A61F 2/6607 623/47
6,508,842	B1	1/2003	Caspers	
6,544,292	B1	4/2003	Laghi	
6,613,096	B1 *	9/2003	Shirvis	A61F 2/80 137/542
6,626,952	B2	9/2003	Janusson et al.	
6,706,364	B2	3/2004	Janusson et al.	
6,761,742	B2	7/2004	Caspers	
6,797,008	B1	9/2004	Arbogast et al.	
6,979,355	B1 *	12/2005	Slemker	A61F 2/80 623/34
7,448,407	B2	11/2008	Alley et al.	
7,993,413	B2	8/2011	Perkins et al.	
8,206,459	B1 *	6/2012	Lock	A61F 2/48 24/303
8,343,233	B2	1/2013	Perkins et al.	
2003/0078674	A1 *	4/2003	Phillips	A61F 2/7843 623/37
2004/0083008	A1 *	4/2004	Molino	A61F 2/64 623/44

(Continued)

Primary Examiner — Bruce E Snow
Assistant Examiner — Melissa Hoban
(74) *Attorney, Agent, or Firm* — Pedersen & Company, PLLC; Ken J. Pedersen; Barbara S. Pedersen

(57) **ABSTRACT**

A valve device regulates the air pressure in the space between a residual limb, or liner-covered limb, and a hard socket of an external prosthesis. A manually-controlled air-outlet and -inlet valve may optionally include an automatic one-way valve (or "expulsion" valve). The manually-controlled valve is opened and closed by twisting a handle, to open a two-way air passageway by slightly separating the handle and base portions, or by aligning bores in the handle and base portions. At least one stop surface limits the amount of relative rotation of the handle and base portions of the valve, so that the user need only rotate the handle a small amount, for example, less than 90 degrees, to affect opening or closing the valve.
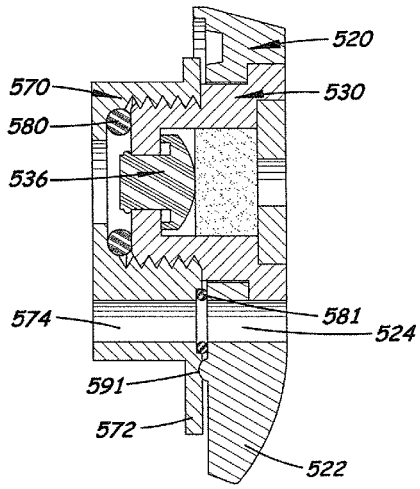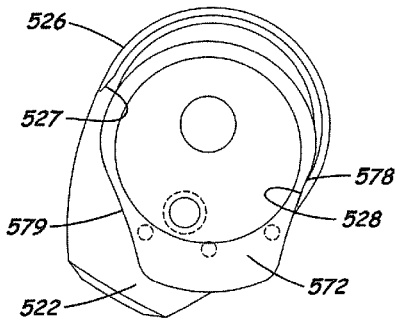
23 Claims, 18 Drawing Sheets