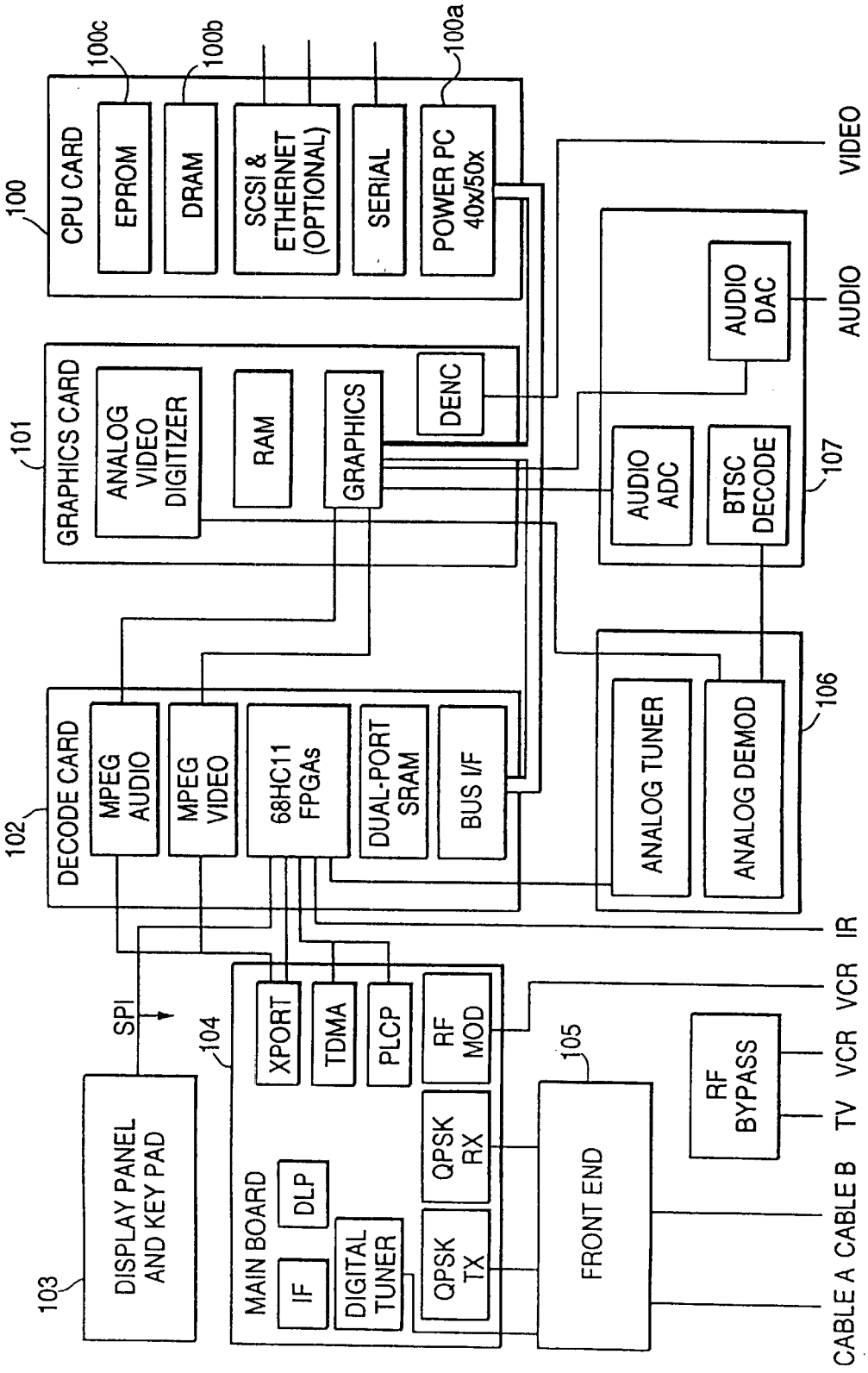
100
CPU CARD
EPROM
DRAM
SCSI & ETHERNET (OPTIONAL)
SERIAL
POWER PC 40x/50x
100c
100b
100a
101
GRAPHICS CARD
ANALOG VIDEO DIGITIZER
RAM
GRAPHICS
DENC
102
DECODE CARD
MPEG AUDIO
MPEG VIDEO
68HC11 FPGAs
DUAL-PORT SRAM
BUS I/F
AUDIO DAC
AUDIO ADC
BTSC DECODE
107
ANALOG TUNER
ANALOG DEMOD
106
VIDEO
AUDIO
IR
SPI
103
DISPLAY PANEL AND KEY PAD
104
MAIN BOARD
XPORT
TDMA
PLCP
RF MOD
QPSK RX
QPSK TX
IF
DLP
DIGITAL TUNER
105
FRONT END
RF BYPASS
VCR
VCR
TV
CABLE B
CABLE A

FIG. 1