March 23, 1954 L. A. THOMSON ET AL 2,672,823

ROTARY PUMP

Filed Jan. 12, 1948 3 Sheets-Sheet 1

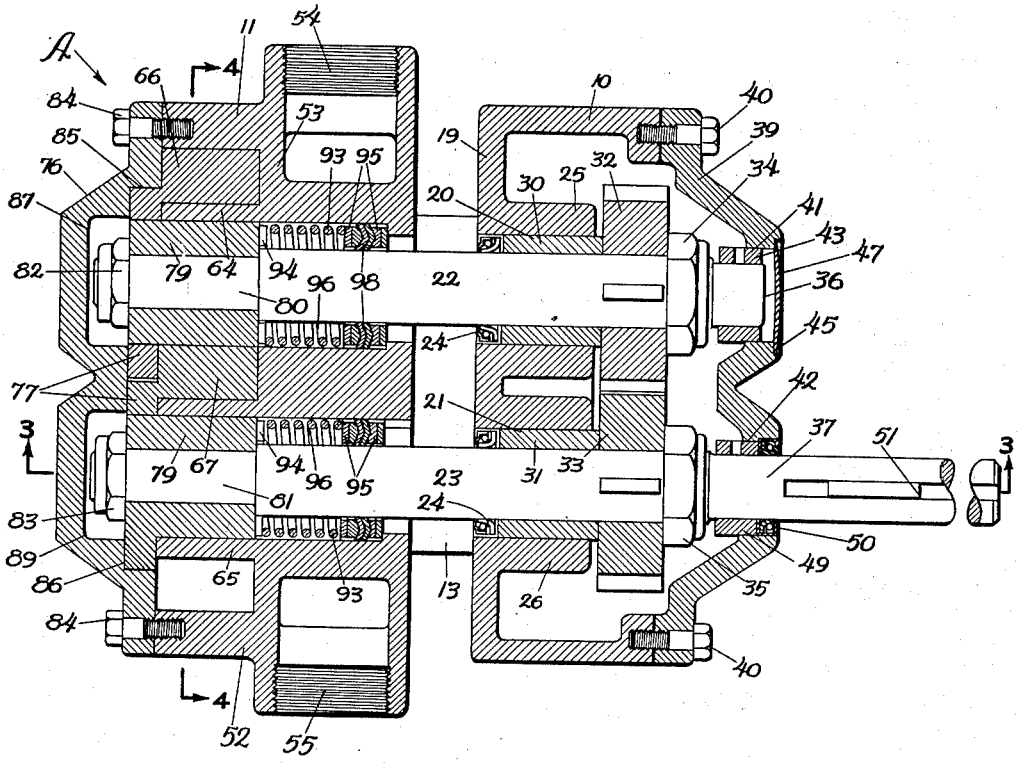

Fig. 2

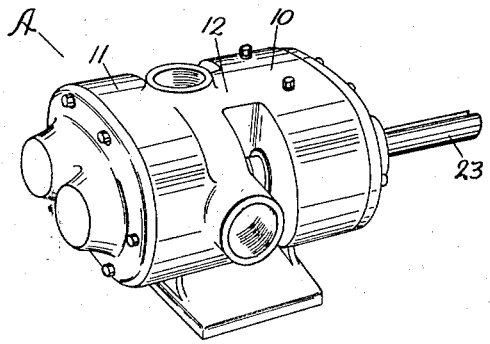

Fig. 1

Inventor
Leroy A. Thomson and
David F. Thomas
By Robert M. Dunning