US006968623B2

(12) **United States Patent**
Braun et al.

(10) **Patent No.: US 6,968,623 B2**
(45) **Date of Patent: Nov. 29, 2005**

(54) **HAIR TRIMMER WITH ADJUSTABLE COMB**

(75) Inventors: **Christopher J. Braun**, Racine, WI (US); **John M. Piwaron**, Milwaukee, WI (US)

(73) Assignee: **Andis Company**, Sturtevant, WI (US)

(*) Notice: Subject to any disclaimer, the term of this patent is extended or adjusted under 35 U.S.C. 154(b) by 81 days.

(21) Appl. No.: **10/464,203**

(22) Filed: **Jun. 18, 2003**

(65) **Prior Publication Data**

US 2003/0233754 A1 Dec. 25, 2003

Related U.S. Application Data

(60) Provisional application No. 60/390,558, filed on Jun. 21, 2002.

(51) **Int. Cl.**[7] **B26B 19/20**
(52) **U.S. Cl.** **30/201**; 30/233.5
(58) **Field of Search** 30/196, 200, 201, 30/233, 233.5, 202, 43.1, 293

(56) **References Cited**

U.S. PATENT DOCUMENTS

3,222,781 A 12/1965 Luther et al.
3,648,370 A 3/1972 Cercone
3,992,778 A 11/1976 Urbush
4,557,050 A 12/1985 Haraguchi et al.
4,614,036 A 9/1986 Haraguchi
4,669,189 A * 6/1987 Ullmann 30/201
4,776,095 A * 10/1988 Tsujimoto et al. 30/201
4,845,852 A * 7/1989 Sukow 30/201
4,949,460 A 8/1990 Sterk
5,084,974 A * 2/1992 Sukow et al. 30/201
5,325,589 A 7/1994 Kubo
5,367,772 A 11/1994 Ogawa
5,604,985 A 2/1997 Andis et al.
5,898,999 A * 5/1999 Chaouachi et al. 30/201
5,979,060 A * 11/1999 Holzbauer et al. 30/201
6,079,103 A 6/2000 Melton et al.
6,125,545 A 10/2000 Yamaguchi et al.
6,578,269 B2 * 6/2003 Wilcox et al. 30/201

* cited by examiner

Primary Examiner—Hwei-Siu Payer
(74) *Attorney, Agent, or Firm*—Michael Best & Friedrich LLP

(57) **ABSTRACT**

A hair trimmer having an adjustable comb actuator assembly capable of moving a comb to a number of positions between a fully retracted position and a fully extended position for varying the cutting length of the hair trimmer. The actuator assembly includes a comb carriage, a comb button, a lock spring, and a lock button.
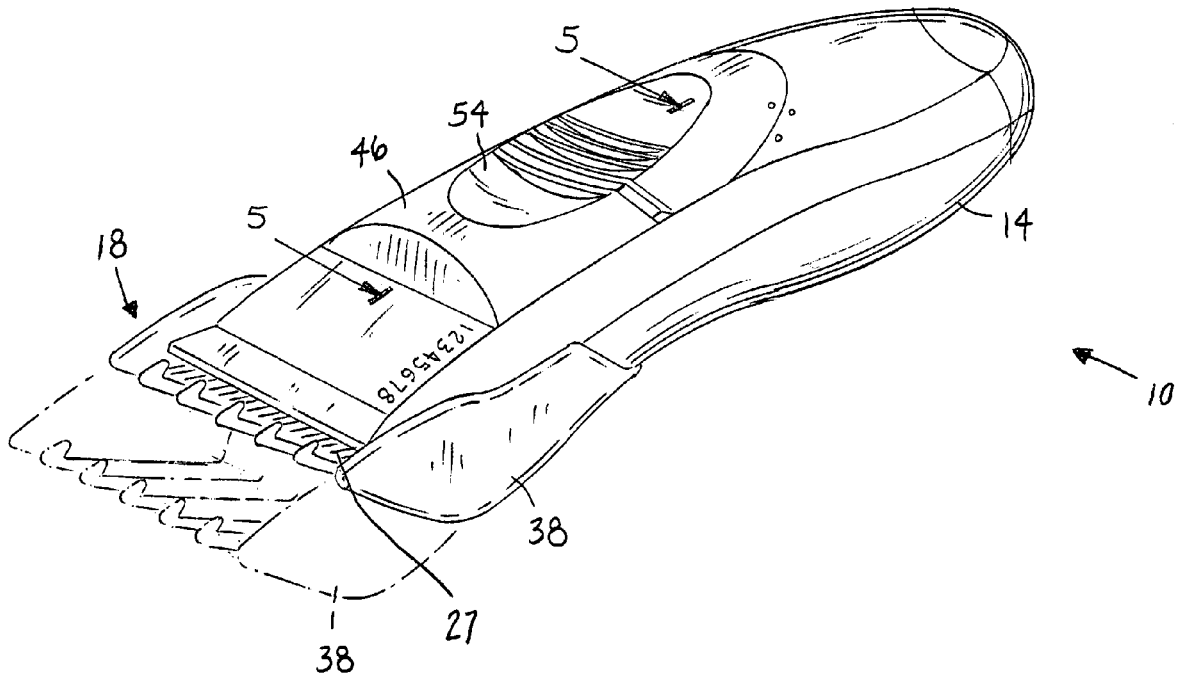
17 Claims, 5 Drawing Sheets