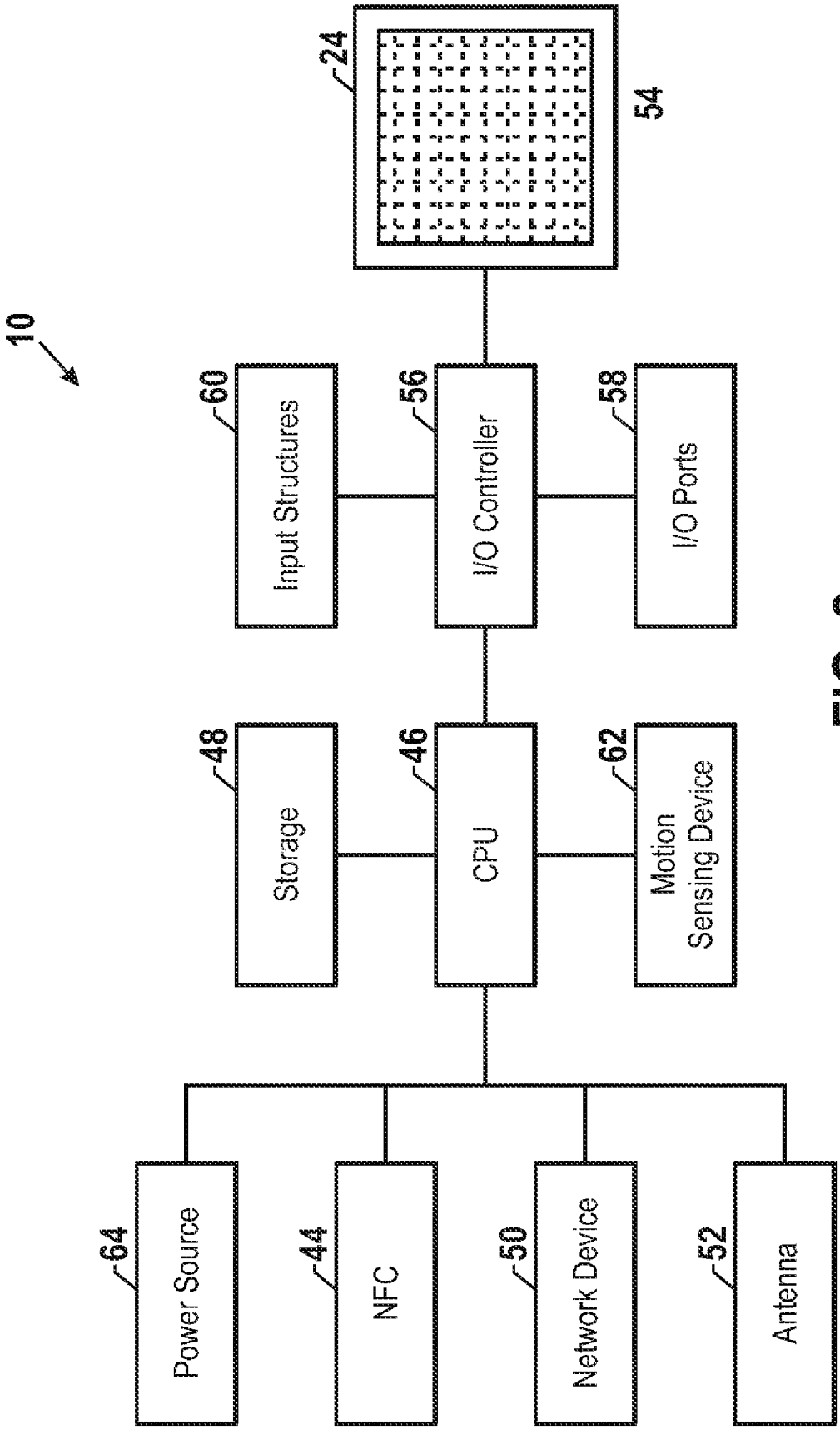
10
24
54
60
Input Structures
56
I/O Controller
58
I/O Ports
48
Storage
46
CPU
62
Motion Sensing Device
64
Power Source
44
NFC
50
Network Device
52
Antenna

FIG. 2