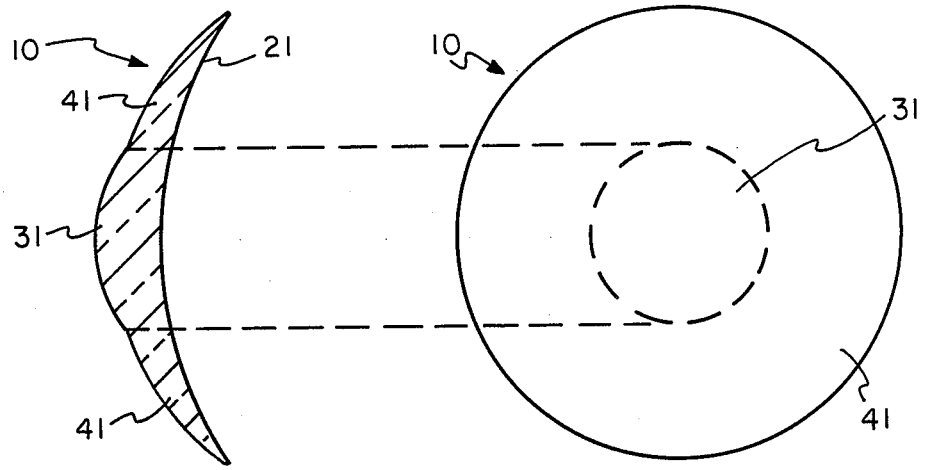

Fig. 1 PRIOR ART

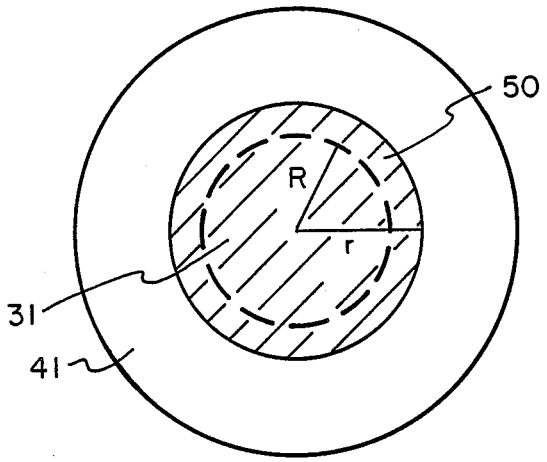

Fig. 2 PRIOR ART

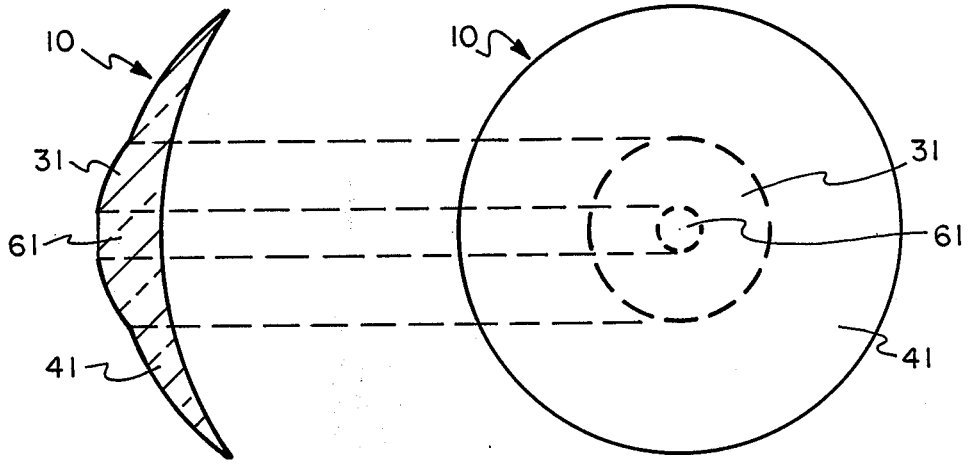

Fig. 3