Sept. 13, 1960 H. ROSEN 2,952,023

CORNEAL FABRICATION

Filed March 19, 1957 2 Sheets-Sheet 1

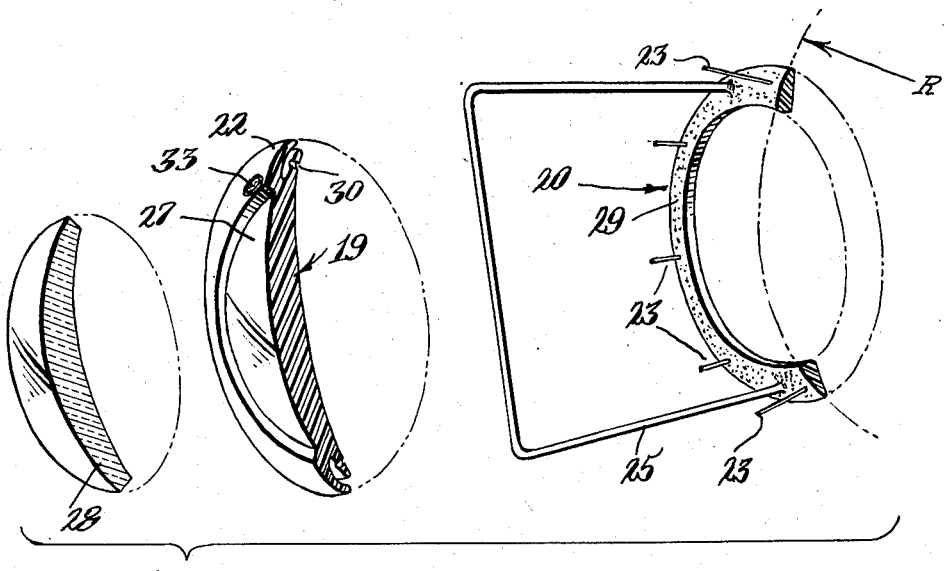

Fig. 1

Fig. 2

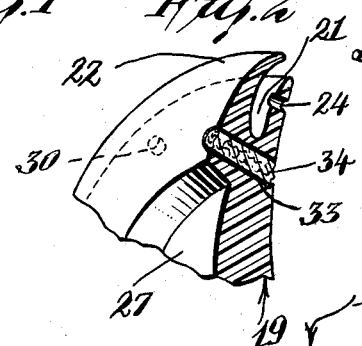

Fig. 3

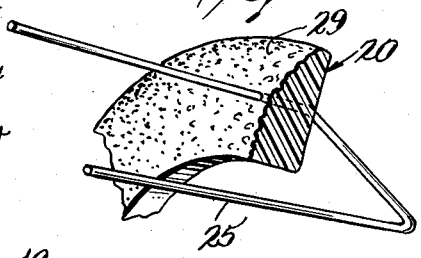

Fig. 4

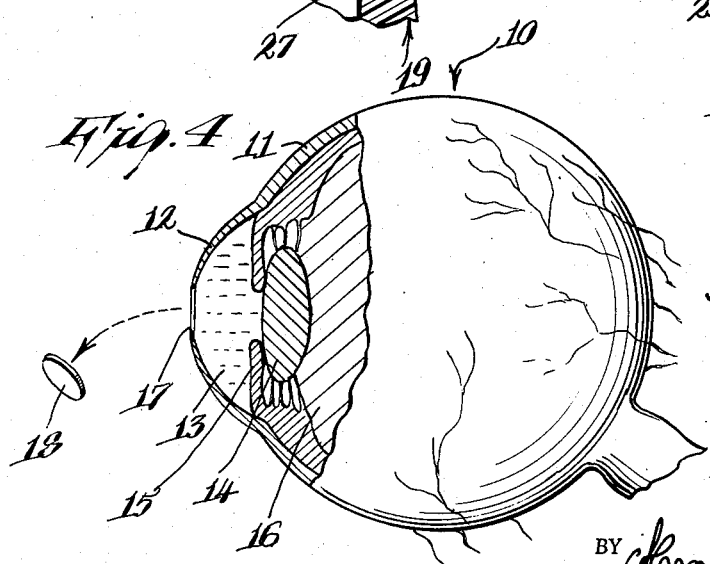

Fig. 3a

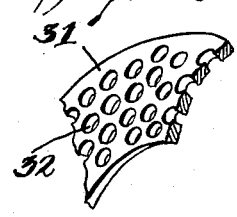

HYMAN ROSEN
INVENTOR.

BY [signature]

ATTORNEY