US009543423B2

(12) **United States Patent**
Luo et al.

(10) **Patent No.: US 9,543,423 B2**
(45) **Date of Patent: Jan. 10, 2017**

(54) **HOT-ELECTRON TRANSISTOR HAVING MULTIPLE MSM SEQUENCES**

(71) Applicant: **CARNEGIE MELLON UNIVERSITY**, Pittsburgh, PA (US)

(72) Inventors: **Yi Luo**, Pittsburgh, PA (US); **Yixuan Chen**, Pittsburgh, PA (US); **Rozana Hussin**, Pittsburgh, PA (US); **Richard Carley**, Sewickley, PA (US)

(73) Assignee: **Carnegie Mellon University**, Pittsburgh, PA (US)

(*) Notice: Subject to any disclaimer, the term of this patent is extended or adjusted under 35 U.S.C. 154(b) by 0 days.

(21) Appl. No.: **14/425,403**

(22) PCT Filed: **Sep. 4, 2013**

(86) PCT No.: **PCT/US2013/058053**
§ 371 (c)(1),
(2) Date: **Mar. 3, 2015**

(87) PCT Pub. No.: **WO2014/039550**
PCT Pub. Date: **Mar. 13, 2014**

(65) **Prior Publication Data**
US 2015/0255588 A1 Sep. 10, 2015

Related U.S. Application Data

(60) Provisional application No. 61/743,438, filed on Sep. 4, 2012.

(51) **Int. Cl.**
H01L 29/08 (2006.01)
H01L 29/80 (2006.01)
(Continued)

(52) **U.S. Cl.**
CPC ***H01L 29/7606*** (2013.01); ***H01L 21/24*** (2013.01); ***H01L 29/04*** (2013.01); ***H01L 29/0649*** (2013.01);
(Continued)

(58) **Field of Classification Search**
CPC H01L 29/7606; H01L 29/45; H01L 29/04; H01L 29/775; H01L 2924/13071
See application file for complete search history.

(56) **References Cited**

U.S. PATENT DOCUMENTS

3,553,365 A * 1/1971 Jauernik H04N 5/10 327/141
4,038,563 A * 7/1977 Zuleeg H03K 19/09407 257/272
(Continued)

FOREIGN PATENT DOCUMENTS

JP 61-35384 2/1986
KR 10-2010-0037007 4/2010
(Continued)

OTHER PUBLICATIONS

International Search Report and Written Opinion dated Dec. 27, 2013 for International Appln. No. PCT/US2013/058053 (8 pgs.).
(Continued)

Primary Examiner — Thomas L Dickey
Assistant Examiner — Damon Hillman
(74) *Attorney, Agent, or Firm* — Fish & Richardson P.C.

(57) **ABSTRACT**
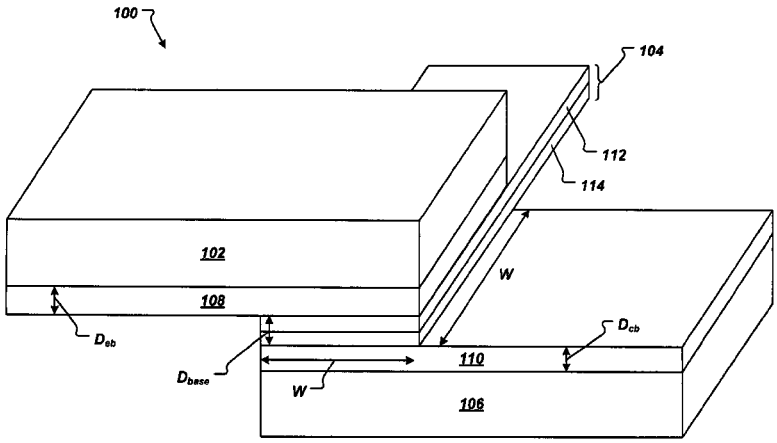
In one aspect, a transistor comprises a metal emitter, a first semiconductor barrier, a metal base, a second semiconductor barrier, and a metal collector. The first semiconductor barrier separates the metal emitter and the metal base and has an average thickness based on a first mean free path of a charge carrier in the first semiconductor barrier emitted from the metal emitter. The second semiconductor barrier separates
(Continued)