US006730123B1

(12) **United States Patent**
Klopotek

(10) **Patent No.: US 6,730,123 B1**
(45) **Date of Patent: May 4, 2004**

(54) **ADJUSTABLE INTRAOCULAR LENS**

(75) Inventor: **Peter J. Klopotek**, Framingham, MA (US)

(73) Assignee: **Proteus Vision, LLC**, Wellesley, MA (US)

(*) Notice: Subject to any disclaimer, the term of this patent is extended or adjusted under 35 U.S.C. 154(b) by 0 days.

(21) Appl. No.: **09/599,232**

(22) Filed: **Jun. 22, 2000**

(51) **Int. Cl.**[7] **A61F 2/16**
(52) **U.S. Cl.** **623/6.22**
(58) **Field of Search** 623/6.13, 6.22, 623/6.31, 6.37; A61F 2/16

(56) **References Cited**

U.S. PATENT DOCUMENTS

3,598,479	A		8/1971	Wright	351/159
3,677,667	A		7/1972	Morrison	417/474
3,963,380	A		6/1976	Thomas, Jr. et al.	417/322
4,298,996	A		11/1981	Barnet	3/13
4,373,218	A	*	2/1983	Schachar	623/6.13
4,466,705	A		8/1984	Michelson	350/418
4,564,267	A		1/1986	Nishimoto	350/379
4,583,924	A		4/1986	Zenglein et al.	417/420
4,585,457	A		4/1986	Kalb	623/6
4,601,545	A		7/1986	Kern	350/347
4,685,921	A		8/1987	Peyman	623/6
4,685,922	A		8/1987	Peyman	623/6
4,709,996	A		12/1987	Michelson	350/418
4,790,847	A		12/1988	Woods	623/6
4,816,031	A		3/1989	Pfoff	623/6
4,842,601	A		6/1989	Smith	623/6
4,913,536	A		4/1990	Barnea	350/419
4,932,966	A		6/1990	Christie et al.	623/6
4,950,289	A	*	8/1990	Krasner	623/6.13
4,994,082	A		2/1991	Richards et al.	623/6
5,066,301	A		11/1991	Wiley	623/6
5,108,429	A		4/1992	Wiley	623/6
5,171,266	A		12/1992	Wiley et al.	623/6
5,203,788	A		4/1993	Wiley	623/6
5,275,623	A		1/1994	Sarfarazi	623/6
5,443,506	A		8/1995	Garabet	623/6
5,494,415	A		2/1996	Morita	417/412
5,684,637	A	*	11/1997	Floyd	359/666
RE36,150	E		3/1999	Gupta	623/6
5,964,802	A	*	10/1999	Anello et al.	623/6.13
6,096,078	A	*	8/2000	McDonald	623/6.22
2003/0060878	A1	*	3/2003	Shadduck	623/6.13

FOREIGN PATENT DOCUMENTS

GB	2273133	2/1994
SU	1810052	4/1993
WO	9929266	6/1999

OTHER PUBLICATIONS

Stefan Kluge, et al—"Mikroelektronik liefert Grundlagen fur Mikropumpen," *Transfer* (15); 50–54 (1996).

* cited by examiner

Primary Examiner—David H. Willse
Assistant Examiner—Javier G. Blanco
(74) *Attorney, Agent, or Firm*—Thomas J. Engellenner; Reza Mollaaghababa; Nutter McClennen & Fish, LLP

(57) **ABSTRACT**

The present invention provides an intra-ocular lens (IOL) whose focusing performance can be modified after its implantation in the eye without a need for any invasive procedure. An IOL of the invention has an optical chamber having at least a flexible region that is deformable under influence of a fluid. The IOL further include a reservoir for storing an optical fluid in fluid communication with the optical chamber, and a valve that regulates the fluid communication between the reservoir and the optical chamber. The lens can also include a pump that is actuated by an external energy source to transfer the optical fluid between the reservoir and the optical chamber to change the amount of fluid in the optical chamber, thereby modifying the focusing performance of the IOL.
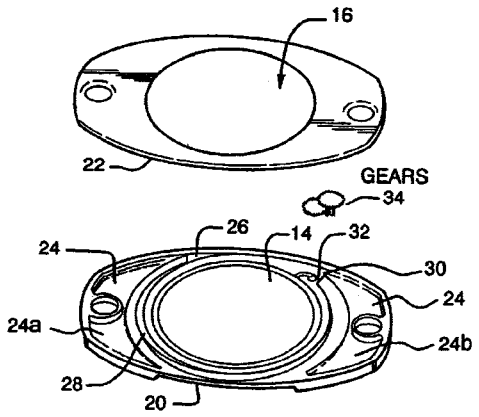
49 Claims, 23 Drawing Sheets