A. SEMMENDINGER.

Camera.

No. 29,523. Patented Aug. 7, 1860.

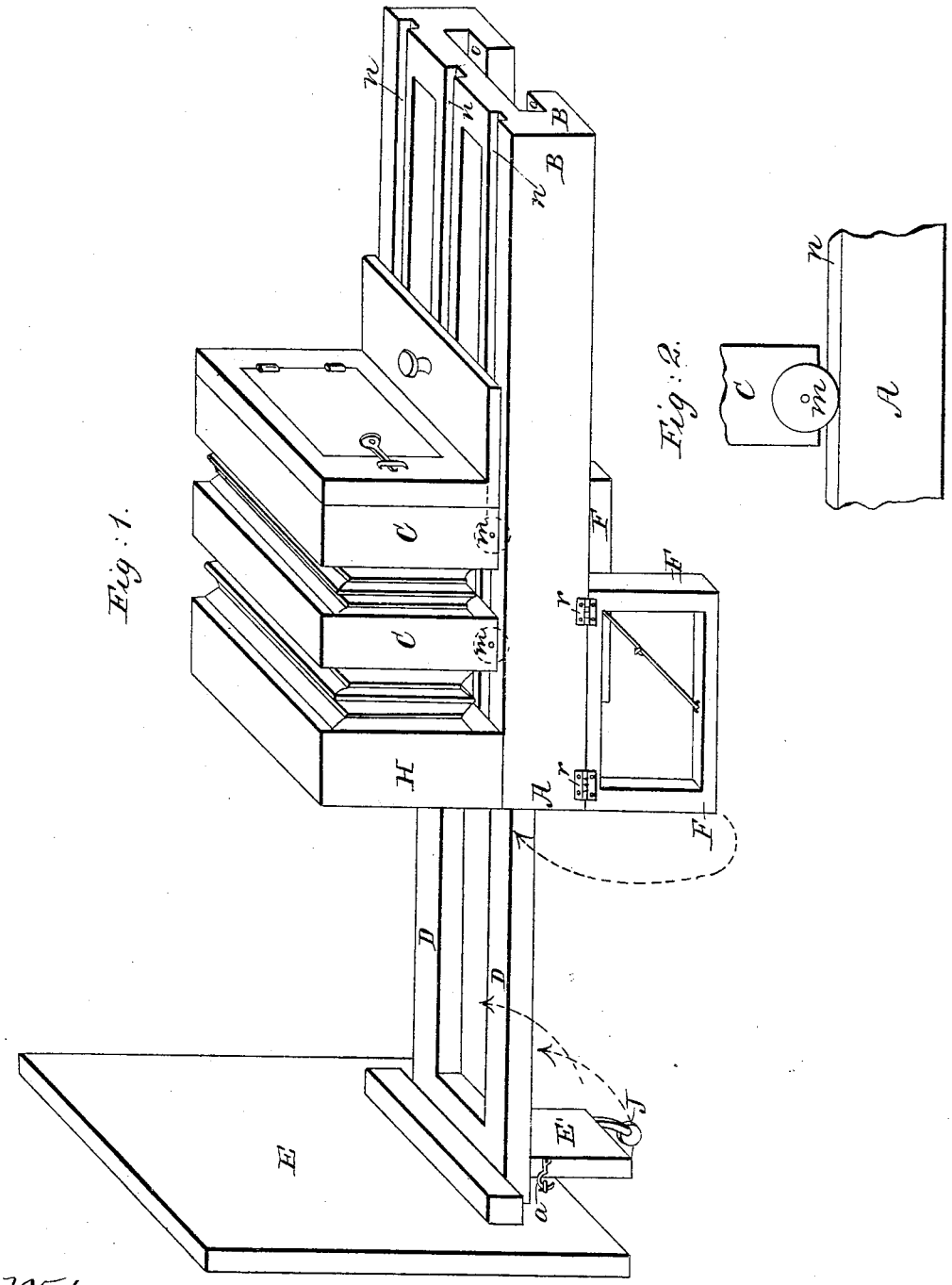


Witnesses:
Chs. Wehle
Jul. Wehle

Inventor
Aug. Semmendinger.

N. PETERS. Photo-Lithographer, Washington, D. C.