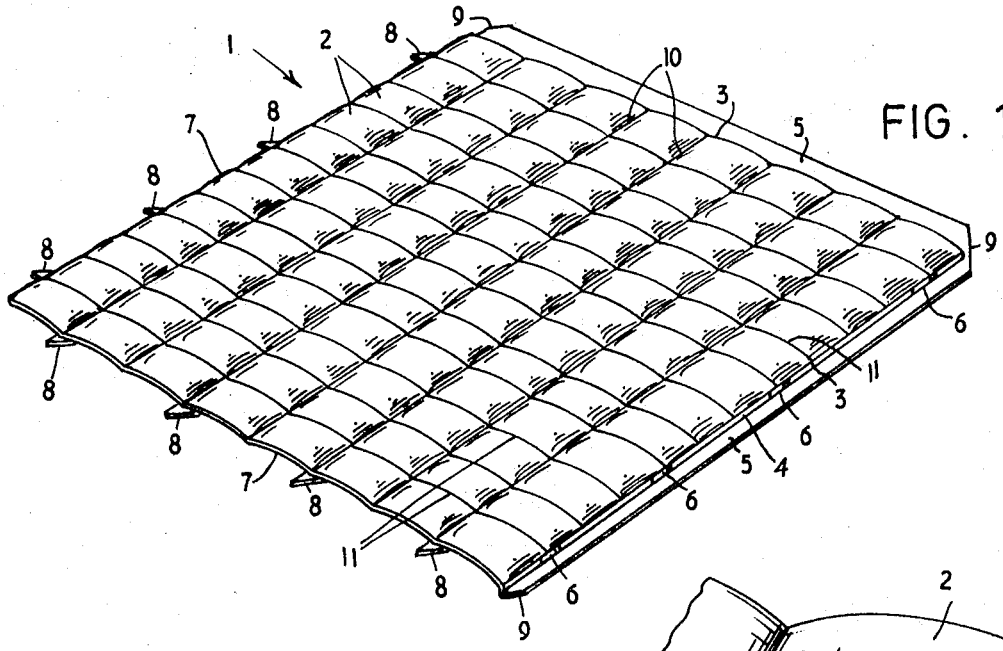

FIG. 1.

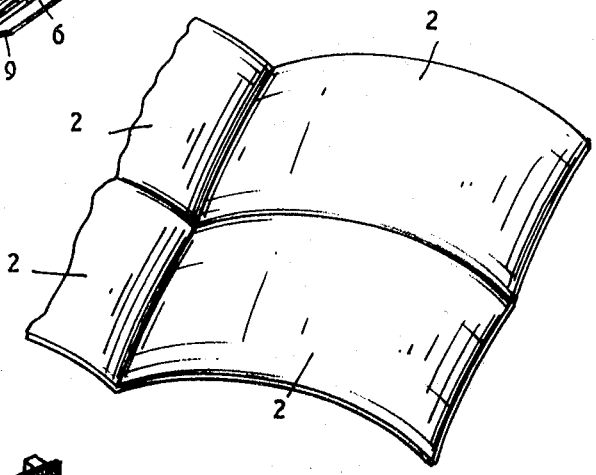

FIG. 2.

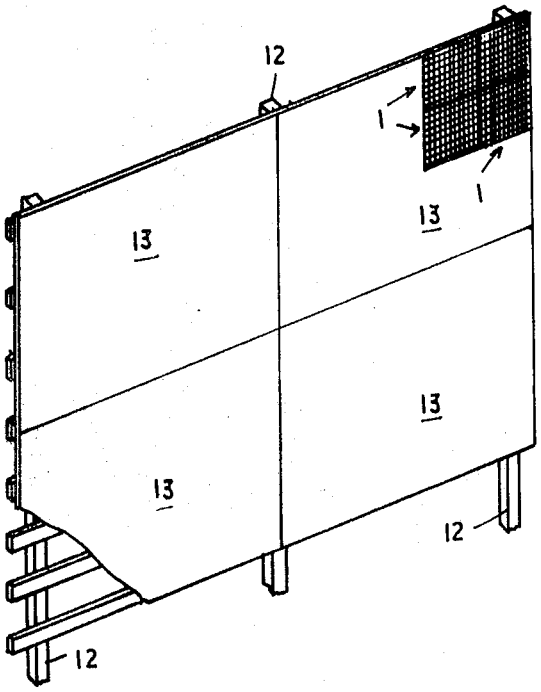

FIG. 3.

INVENTOR
GORDON R. BRAKELL
By Emory L. Groff Jr. ATTY