Nov. 26, 1963 A. D. BATES 3,111,723

ROOM DIVIDER DEVICE

Filed Sept. 8, 1959 2 Sheets-Sheet 1

FIG. 1

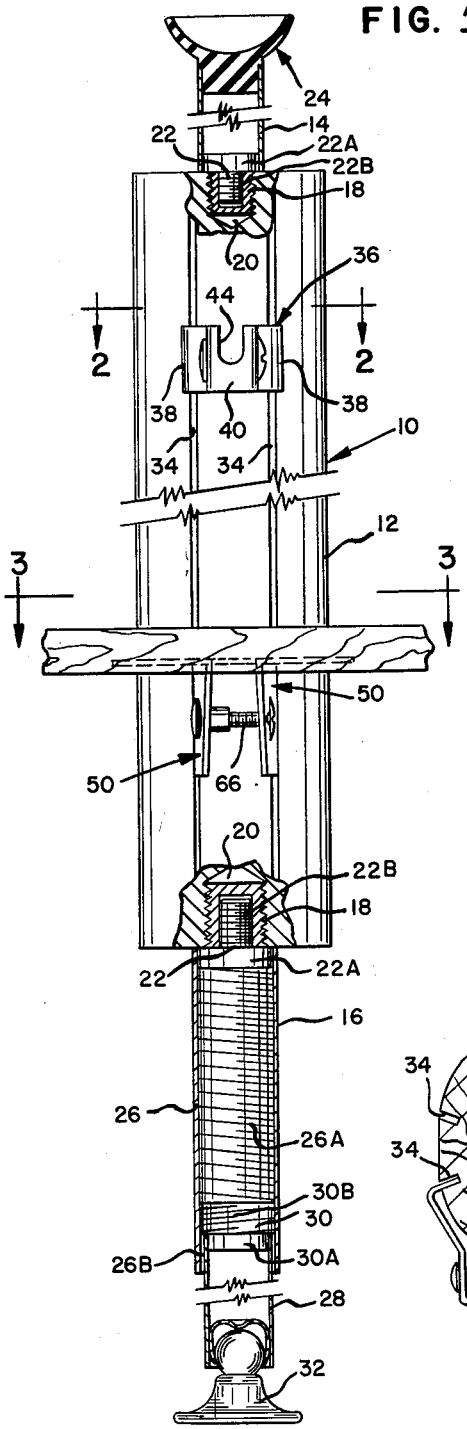

FIG. 2

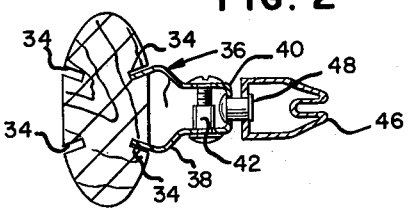

FIG. 3

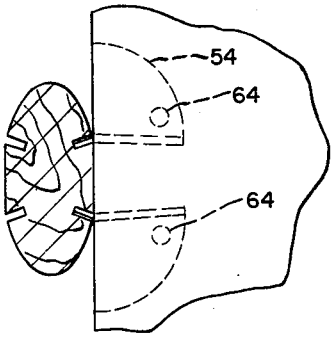

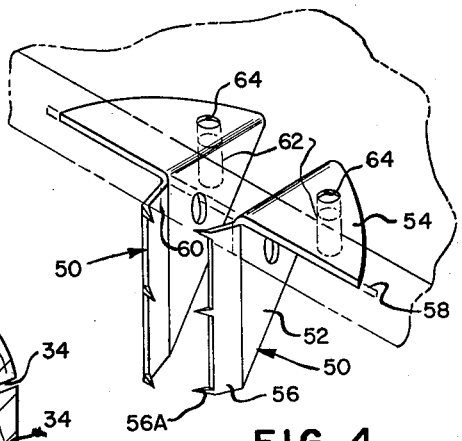

FIG. 4

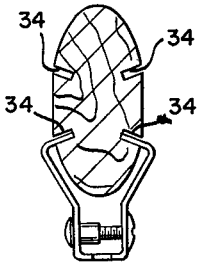

FIG. 5

INVENTOR.
ALBERT D. BATES
BY
WILSON, LEWIS & McRAE
ATTORNEYS