US009411323B2

(12) **United States Patent**
Tappeiner

(10) **Patent No.: US 9,411,323 B2**
(45) **Date of Patent: Aug. 9, 2016**

(54) **HOME ENERGY MANAGEMENT SYSTEM**

(71) Applicant: **Tekpea, Inc.**, Palo Alto, CA (US)

(72) Inventor: **Davide Tappeiner**, Genoa (IT)

(73) Assignee: **Tekpea, Inc.**, Palo Alto, CA (US)

(*) Notice: Subject to any disclaimer, the term of this patent is extended or adjusted under 35 U.S.C. 154(b) by 306 days.

(21) Appl. No.: **13/864,638**

(22) Filed: **Apr. 17, 2013**

(65) **Prior Publication Data**

US 2013/0282196 A1 Oct. 24, 2013

Related U.S. Application Data

(60) Provisional application No. 61/635,204, filed on Apr. 18, 2012.

(51) **Int. Cl.**

G05B 13/02	(2006.01)
G05B 15/02	(2006.01)
H04L 12/28	(2006.01)

(52) **U.S. Cl.**

CPC ***G05B 13/02*** (2013.01); ***G05B 15/02*** (2013.01); ***H04L 12/2836*** (2013.01); *G05B 2219/25168* (2013.01)

(58) **Field of Classification Search**

CPC G05B 13/02; G05B 2219/25168; G05B 15/02

See application file for complete search history.

(56) **References Cited**

U.S. PATENT DOCUMENTS

5,862,391	A *	1/1999	Salas et al.	713/300
5,949,779	A *	9/1999	Mostafa et al.	370/389
6,778,099	B1 *	8/2004	Meyer et al.	340/870.02
6,961,641	B1 *	11/2005	Forth et al.	700/295
7,246,014	B2 *	7/2007	Forth et al.	702/60
8,332,055	B2 *	12/2012	Veillette	700/20
2005/0138432	A1 *	6/2005	Ransom et al.	713/201
2007/0013547	A1 *	1/2007	Boaz	340/870.02
2007/0222579	A1 *	9/2007	Berkman	340/538
2009/0210178	A1 *	8/2009	Bieganski	702/62
2010/0089909	A1	4/2010	Besore et al.	

(Continued)

FOREIGN PATENT DOCUMENTS

WO WO 2013158886 A1 * 10/2013

OTHER PUBLICATIONS

Choi, Tae-Seop et al., "Analysis of Energy Savings using Smart Metering System and IHD (In-Home Display)", Transmission & Distribution Conference & Exposition: Asia and Pacific, 2009, IEEE, Oct. 26, 2009, pp. 1-4, Piscataway, NJ, US.

(Continued)

Primary Examiner — Ramesh Patel

(74) *Attorney, Agent, or Firm* — Maschoff Brennan

(57) **ABSTRACT**

A home energy management system includes a protocol conversion device configured to provide bi-directional communication between a networking device and one or more energy meters, wherein the protocol conversion device connects to the networking device via a transmission control protocol/Internet protocol (TCP/IP) and connects to one or more energy meters via one or more communication protocols supported by one or more energy meters. The home energy management system further includes the networking device, connected to the protocol conversion device via the TCP/IP connection, configured to receive, from the protocol conversion device, data packets generated by the one or more energy meters, and transmit the data packets to a remote server.
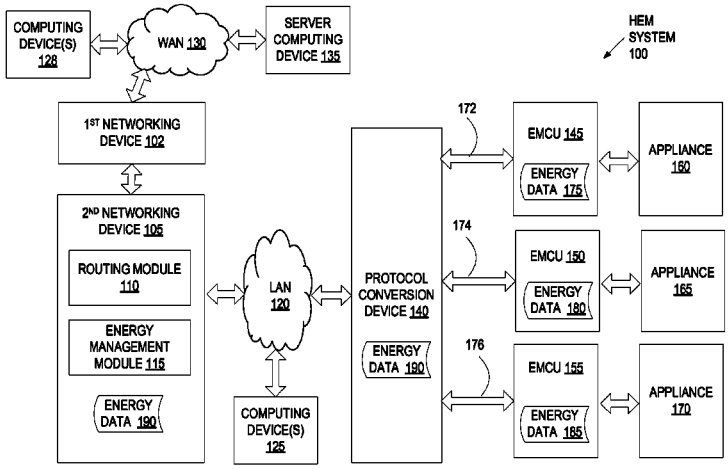
21 Claims, 7 Drawing Sheets