US009510723B2

(12) **United States Patent**
Cottrell et al.

(10) **Patent No.: US 9,510,723 B2**
(45) **Date of Patent: Dec. 6, 2016**

(54) **HOUSEHOLD APPLIANCE HAVING ANTENNAS**

(71) Applicant: **Whirlpool Corporation**, Benton Harbor, MI (US)

(72) Inventors: **Nicholas J. Cottrell**, Berrien Springs, MI (US); **Jason R. Gries**, Southbend, IN (US); **Vince A. Ireland**, Saint Joseph, MI (US); **Blayne C. Smith**, Saint Joseph, MI (US)

(73) Assignee: **Whirlpool Corporation**, Benton Harbor, MI (US)

(*) Notice: Subject to any disclaimer, the term of this patent is extended or adjusted under 35 U.S.C. 154(b) by 0 days.

(21) Appl. No.: **15/177,820**

(22) Filed: **Jun. 9, 2016**

(65) **Prior Publication Data**

US 2016/0278603 A1 Sep. 29, 2016

Related U.S. Application Data

(63) Continuation of application No. 13/721,990, filed on Dec. 20, 2012, now Pat. No. 9,375,125.

(51) **Int. Cl.**

A47L 15/00	(2006.01)
A47L 15/46	(2006.01)
D06F 33/02	(2006.01)
F25D 23/12	(2006.01)
F25D 29/00	(2006.01)

(52) **U.S. Cl.**

CPC ***A47L 15/0018*** (2013.01); ***A47L 15/0063*** (2013.01); ***A47L 15/46*** (2013.01); ***D06F 33/02*** (2013.01); ***F25D 23/12*** (2013.01); ***F25D 29/00*** (2013.01)

(58) **Field of Classification Search**

CPC .. A46L 15/0018; A46L 15/0063; A46L 15/46; D06F 2210/00; D06F 33/02

See application file for complete search history.

(56) **References Cited**

U.S. PATENT DOCUMENTS

6,456,242	B1	9/2002	Crawford
7,363,031	B1	4/2008	Aisa
7,383,644	B2	6/2008	Lyu et al.
7,445,013	B2	11/2008	Vanderroest et al.
7,523,758	B2	4/2009	Vanderroest et al.
2002/0122006	A1	9/2002	Crawford
2009/0118848	A1	5/2009	Santinato et al.
2011/0137657	A1	6/2011	Cenedese et al.
2011/0140972	A1	6/2011	Besore et al.
2011/0222448	A1	9/2011	Ofek et al.
2011/0226808	A1	9/2011	Lonski
2013/0125937	A1	5/2013	Baldwin et al.
2014/0139381	A1	5/2014	Sippel

FOREIGN PATENT DOCUMENTS

CN	202853254	U	4/2013
EP	2302122	A1	3/2011
EP	2339057	A1	6/2011
EP	2700346	A2	2/2014

OTHER PUBLICATIONS

German Search Report for Counterpart DE102013111614.0, Mar. 20, 2014.

Primary Examiner — David Cormier

(57) **ABSTRACT**

A household appliance, such as a dishwasher, for treating an item according to at least one automatic cycle of operation includes multiple antennas for transmitting and receiving data with an external network. The multiple antennas can be coupled with a radio also located within the appliance.
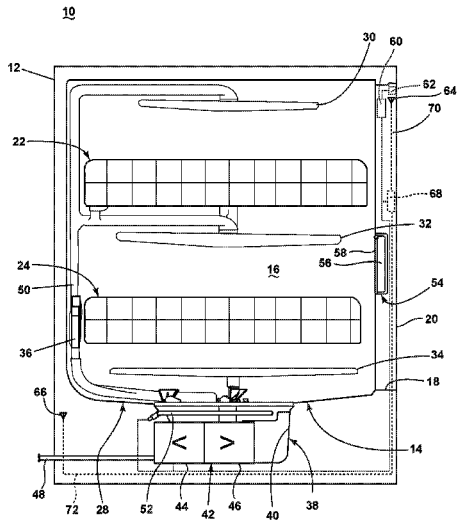
18 Claims, 7 Drawing Sheets