Oct. 27, 1959 P. SCHLUMBOHM 2,910,223

FRICTION PUMPS

Filed May 2, 1955

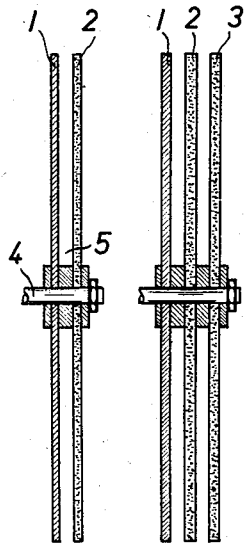

Fig. 1

Fig. 2

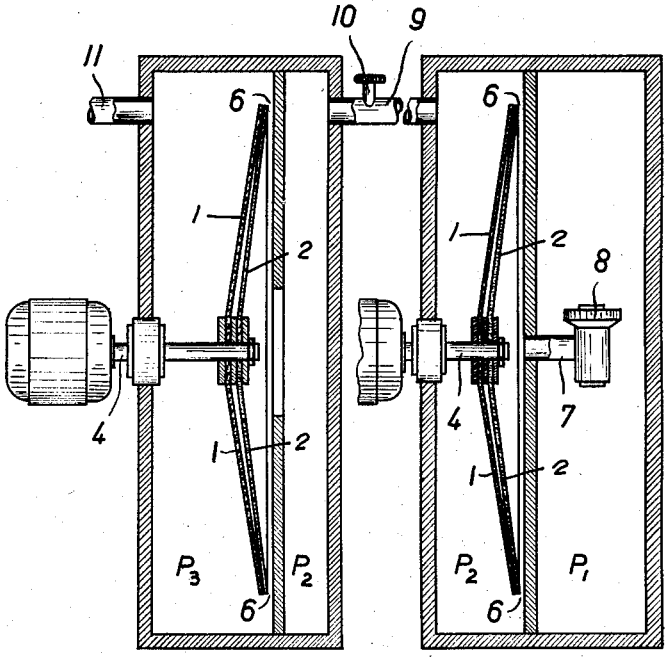

Fig. 3

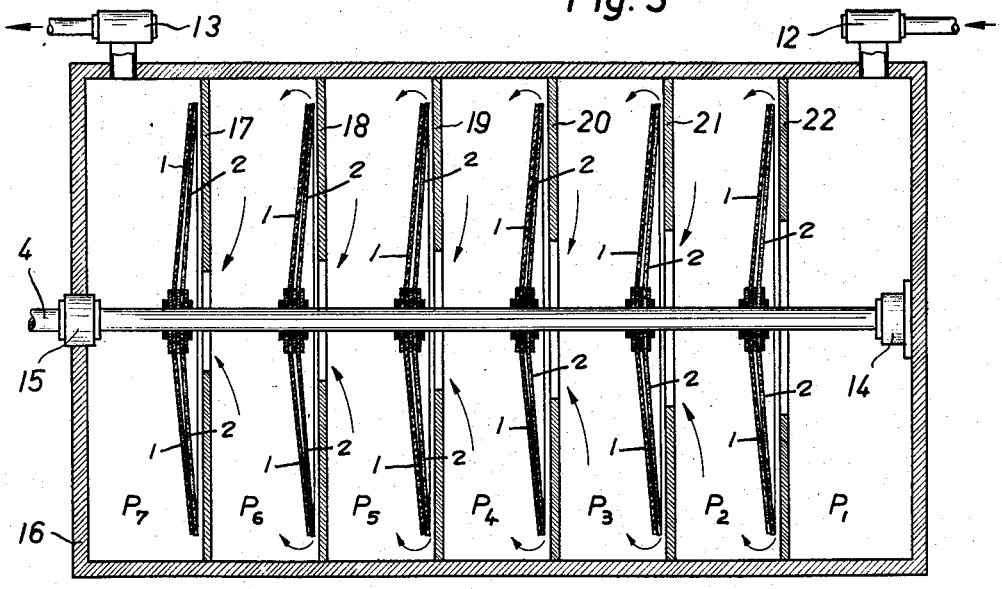

Fig. 4

INVENTOR.

Peter Schlumbohm