US009408423B2

(12) **United States Patent**
Guerra

(10) **Patent No.: US 9,408,423 B2**
(45) **Date of Patent: Aug. 9, 2016**

(54) **IMPACT REDUCING SPORT EQUIPMENT**

(71) Applicant: **David A. Guerra**, Calgary (CA)

(72) Inventor: **David A. Guerra**, Calgary (CA)

(*) Notice: Subject to any disclaimer, the term of this patent is extended or adjusted under 35 U.S.C. 154(b) by 77 days.

(21) Appl. No.: **14/496,962**

(22) Filed: **Sep. 25, 2014**

(65) **Prior Publication Data**

US 2016/0088884 A1 Mar. 31, 2016

(51) **Int. Cl.**

A41D 13/015	(2006.01)
A42B 3/06	(2006.01)
A42B 3/00	(2006.01)
A42B 3/04	(2006.01)

(52) **U.S. Cl.**

CPC ***A41D 13/0156*** (2013.01); ***A42B 3/00*** (2013.01); ***A42B 3/04*** (2013.01); ***A42B 3/06*** (2013.01); ***A42B 3/064*** (2013.01)

(58) **Field of Classification Search**

CPC A41D 13/0156; A32B 3/00; A32B 3/04; A32B 3/06; A32B 3/124; A32B 3/10; A32B 3/062; A32B 3/0486; A32B 3/063; A32B 3/064; A32B 3/605

USPC 2/411

See application file for complete search history.

(56) **References Cited**

U.S. PATENT DOCUMENTS

1,997,187	A *	4/1935	Taylor	A42B 3/00	2/411
2,123,275	A *	7/1938	Dym	A42B 3/06	2/412
2,194,903	A *	3/1940	Holstein	A42B 3/00	2/413
2,239,946	A *	4/1941	Upchurch, Jr.	A42B 3/0406	2/412
2,312,227	A *	2/1943	Yant	A42B 3/06	156/224
2,657,385	A *	11/1953	Cushman	A41D 13/0155	2/24
2,733,177	A	1/1956	Meyer		
3,353,187	A *	11/1967	Lastnik	A42B 3/06	2/412
3,577,305	A *	5/1971	Hines et al.	A41D 13/0155	2/243.1
3,755,059	A	8/1973	Calfee		
4,179,979	A *	12/1979	Cook	F41H 5/0414	109/49.5
4,213,202	A *	7/1980	Larry	A41D 31/005	2/456
4,375,108	A *	3/1983	Gooding	A42B 3/121	2/413
4,412,358	A *	11/1983	Lavender	A42B 3/124	2/412

(Continued)

FOREIGN PATENT DOCUMENTS

RU	2112411 C1	6/1998
RU	2213512 C1	10/2003
RU	2378961 C1	1/2010

Primary Examiner — Shaun R Hurley
Assistant Examiner — Bao-Thieu L Nguyen
(74) *Attorney, Agent, or Firm* — David A. Guerra

(57) **ABSTRACT**

A sport equipment for absorbing and dispersing, at least in part, an impact force, thereby reducing the impact force. The sport equipment can be a helmet having an outer shell, an inner shell, and a tensile sheet located between the outer and inner shells. The outer shell includes an interior side featuring a plurality of outer shell detents extending out therefrom. The inner shell includes an exterior side featuring a plurality of inner shell detents extending toward the outer shell. The tensile sheet is configured to dissipate and redirect, randomly directed impact force applied to the outer shell, to a tensile loading directed along a respective longitudinal axis of the tensile sheet. The outer and inner shells are in a spaced apart relationship with and movable to each other. The outer shell detents extend toward the inner shell.
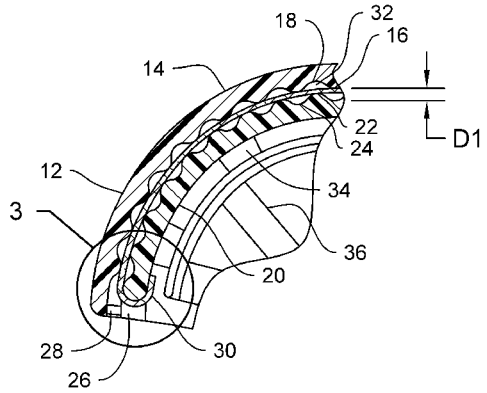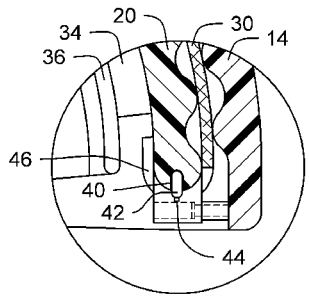
20 Claims, 3 Drawing Sheets