US009207023B2

(12) **United States Patent**
Koplow

(10) **Patent No.: US 9,207,023 B2**
(45) **Date of Patent: Dec. 8, 2015**

(54) **HEAT EXCHANGER DEVICE AND METHOD FOR HEAT REMOVAL OR TRANSFER**

(75) Inventor: **Jeffrey P. Koplow**, San Ramon, CA (US)

(73) Assignee: **Sandia Corporation**, Albuquerque, NM (US)

(*) Notice: Subject to any disclaimer, the term of this patent is extended or adjusted under 35 U.S.C. 154(b) by 1457 days.

(21) Appl. No.: **12/185,570**

(22) Filed: **Aug. 4, 2008**

(65) **Prior Publication Data**

US 2009/0199997 A1 Aug. 13, 2009

Related U.S. Application Data

(60) Provisional application No. 61/008,271, filed on Dec. 18, 2007.

(51) **Int. Cl.**

F28F 13/12	(2006.01)
F28F 3/02	(2006.01)
F04D 25/06	(2006.01)
F04D 29/58	(2006.01)
H01L 23/467	(2006.01)
H05K 7/20	(2006.01)

(52) **U.S. Cl.**

CPC ***F28F 3/02*** (2013.01); ***F04D 25/0606*** (2013.01); ***F04D 25/066*** (2013.01); ***F04D 29/582*** (2013.01); ***F28F 13/125*** (2013.01); ***H01L 23/467*** (2013.01); *H01L 2924/0002* (2013.01)

(58) **Field of Classification Search**

CPC . F04D 25/0606; F04D 25/066; F04D 29/582; F28F 3/02; F28F 13/125; H01L 23/467; H01L 2924/0002; H01L 2924/00

USPC 165/86, 80.3, 185, 104.33; 361/697, 361/702, 703, 704, 709, 710; 174/16.3; 384/123, 99

See application file for complete search history.

(56) **References Cited**

U.S. PATENT DOCUMENTS

3,376,083	A *	4/1968	Muijderman Everhardus	384/123
3,844,341	A *	10/1974	Bimshas et al.	165/86
4,164,690	A	8/1979	Muller et al.	
4,282,464	A *	8/1981	Uzuka	318/400.26
4,380,355	A *	4/1983	Beardmore	384/123
5,000,254	A *	3/1991	Williams	165/85
5,197,858	A	3/1993	Cheng	
5,296,775	A	3/1994	Cronin et al.	
5,297,623	A	3/1994	Ogushi et al.	
5,335,143	A *	8/1994	Maling et al.	361/694

(Continued)

FOREIGN PATENT DOCUMENTS

CN	1987661 A	6/2007
CN	101217859	7/2008

(Continued)

OTHER PUBLICATIONS

PCT/U52009/044550; Written Opinion.

(Continued)

Primary Examiner — Tho V Duong
(74) *Attorney, Agent, or Firm* — Dorsey & Whitney LLP

(57) **ABSTRACT**

Systems and methods for a forced-convection heat exchanger are provided. In one embodiment, heat is transferred to or from a thermal load in thermal contact with a heat conducting structure, across a narrow air gap, to a rotating heat transfer structure immersed in a surrounding medium such as air.
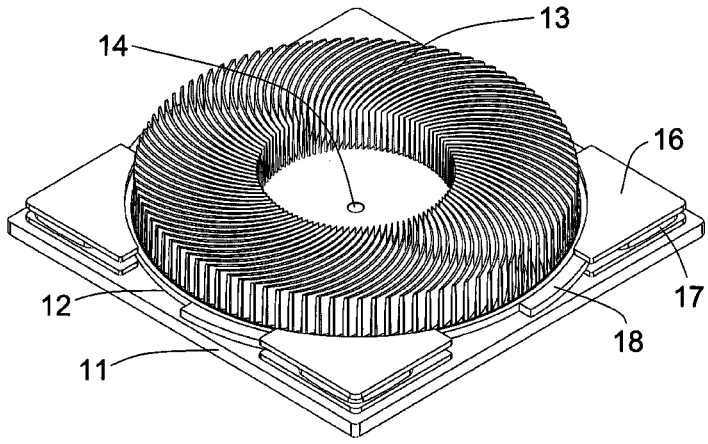
27 Claims, 9 Drawing Sheets