United States Patent [19]

Fukui

[11] **3,805,323**

[45] **Apr. 23, 1974**

[54] **INVISIBLE HINGE AND FRAME TO BE USED FOR THE SAME**

[76] Inventor: **Kamenosuke Fukui,** 30,3-chome Midorigaoka, Yao, Japan

[22] Filed: **June 20, 1972**

[21] Appl. No.: **264,661**

[30] **Foreign Application Priority Data**

Mar. 31, 1972 Japan 47-32373
Mar. 31, 1972 Japan 47-38055
Mar. 31, 1972 Japan 47-38056

[52] **U.S. Cl.** ..... **16/128 R,** 16/164
[51] **Int. Cl.** **E05d 9/00**
[58] **Field of Search** ..... 16/164, 157, 159, 163, 16/165, 166, 128 R; 29/11

[56] **References Cited**

UNITED STATES PATENTS

1,668,137	5/1928	Anderson	16/128 R
1,693,004	11/1928	Soss	16/164
3,209,390	10/1965	Bassan	16/164
1,682,860	9/1928	Soss	16/164
3,611,474	10/1971	Meyer	16/164

Primary Examiner—Bobby R. Gay
Assistant Examiner—Kenneth J. Dorner
Attorney, Agent, or Firm—Markva & Smith

[57] **ABSTRACT**

This invention relates to an invisible hinge which is very easy to mount in a mortise and more particularly to a frame for invisible hinges formed so as to reduce the manufacturing cost and to simplify installation in mortises.
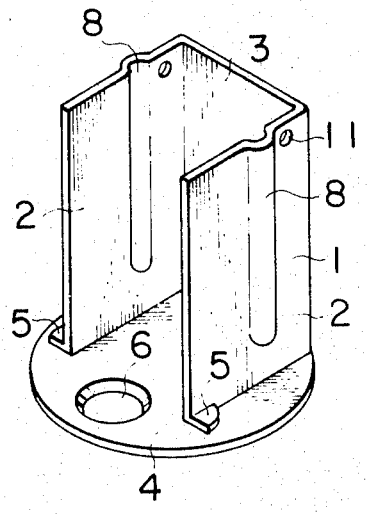
5 Claims, 19 Drawing Figures