FIG. 1

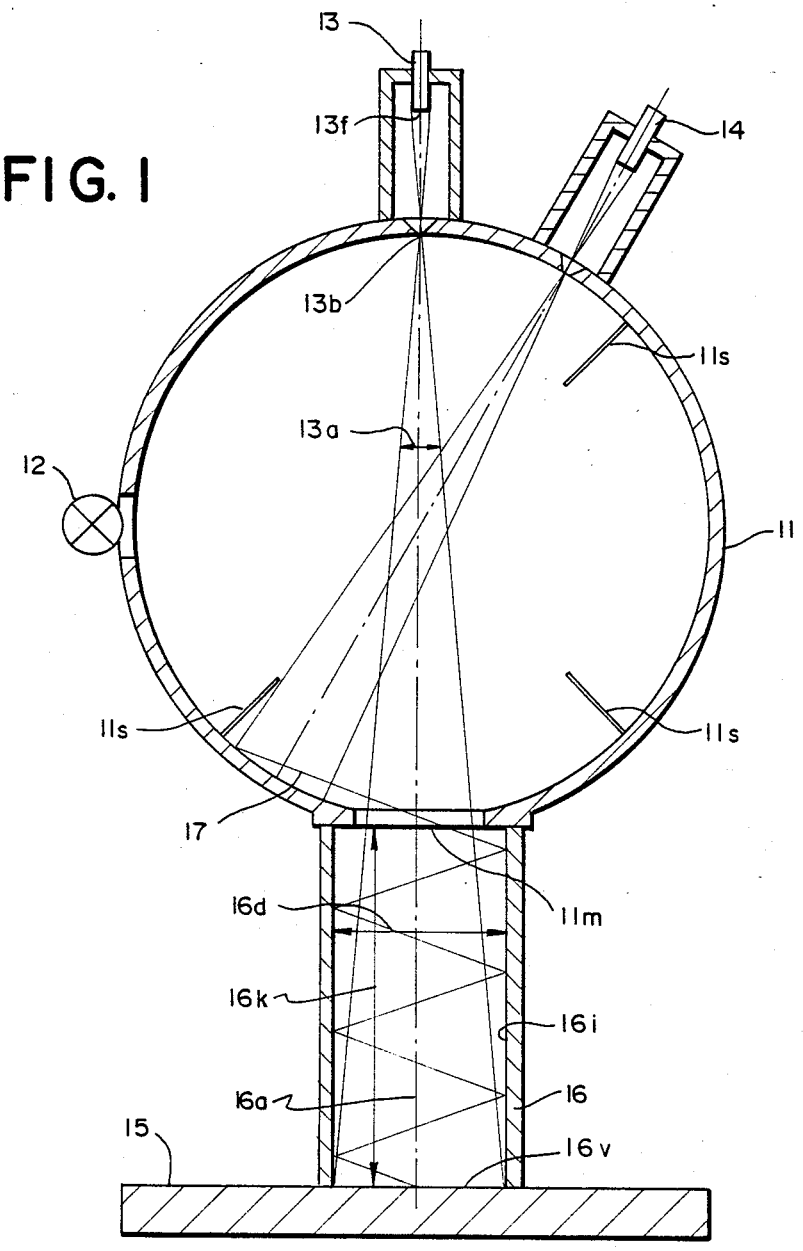
13
13f
14
13b
11s
13a
12
11
11s
11s
17
16d
11m
16k
16i
16a
16
15
16v