350-96.26 5R
XR 3,297,022
SEARCH ROOM

SUBSTITUTE FOR MISSING XR

Jan. 10, 1967 F. J. WALLACE 3,297,022

ENDOSCOPE
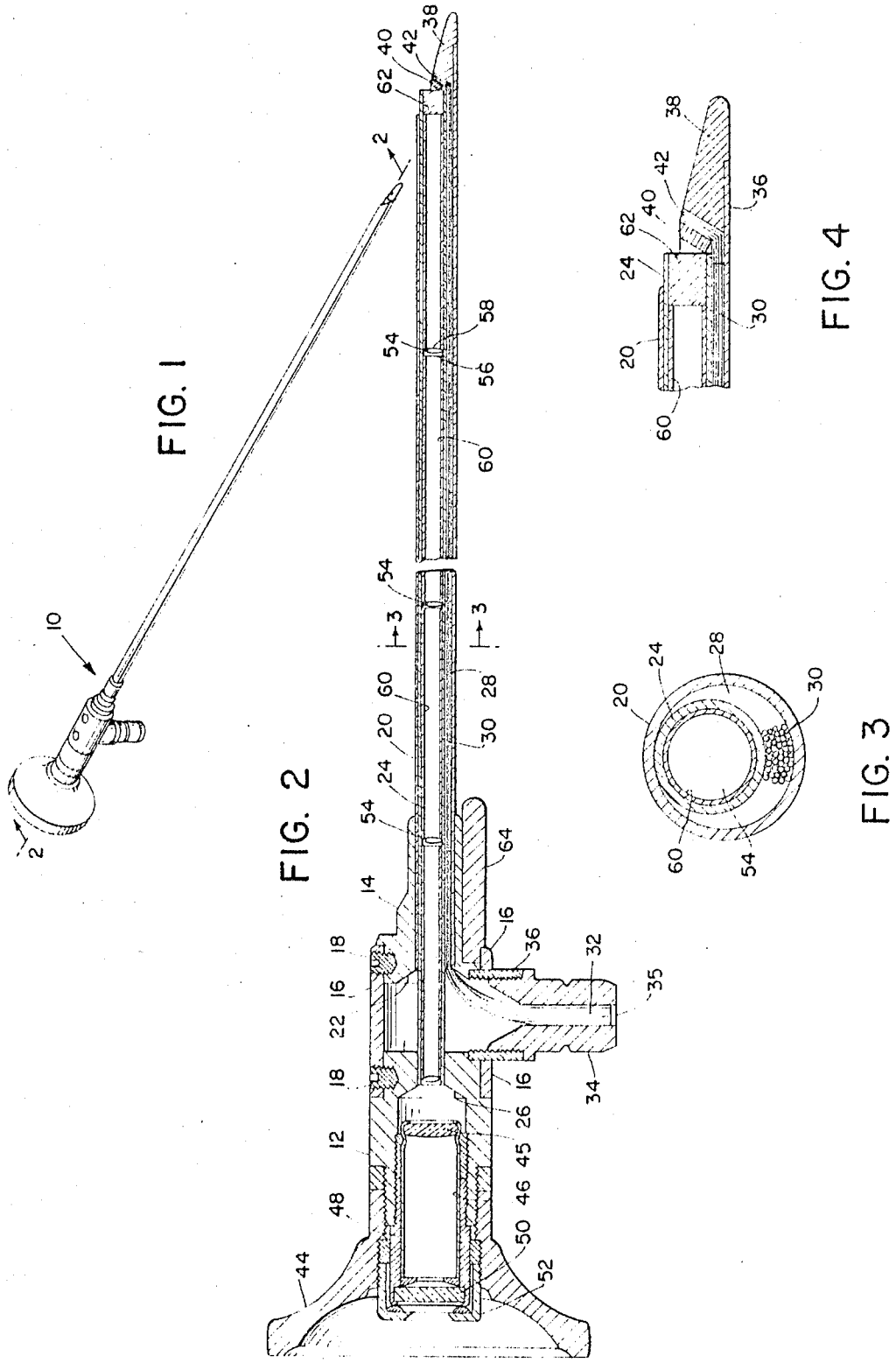
Filed Sept. 27, 1963 4 Sheets-Sheet 1