PORTABLE, SELF-CONTAINED ELECTRICAL PUMPING DEVICE

Original Filed June 14, 1962 2 Sheets-Sheet 1

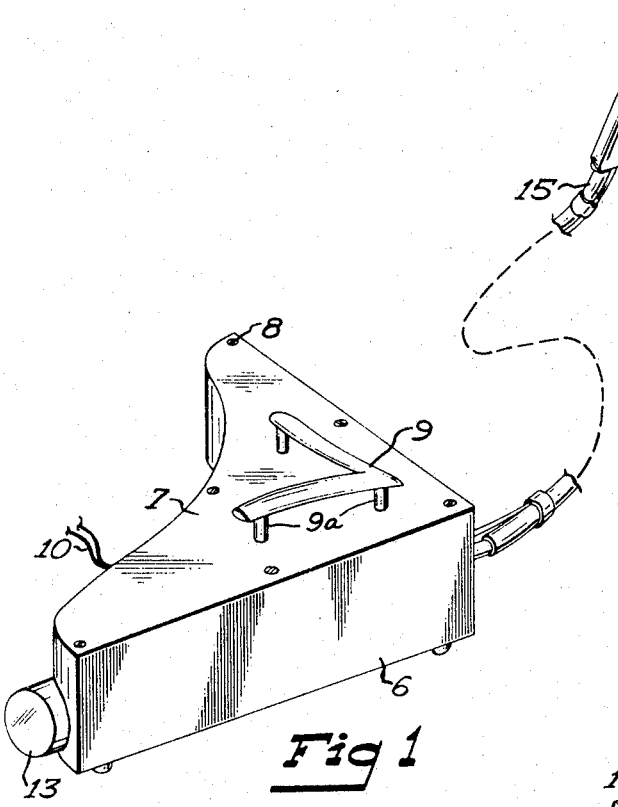

Fig 1

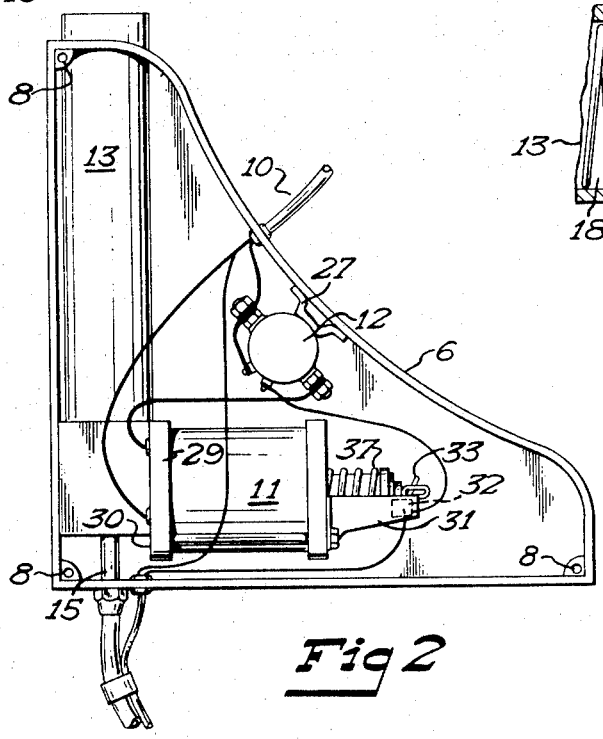

Fig 2

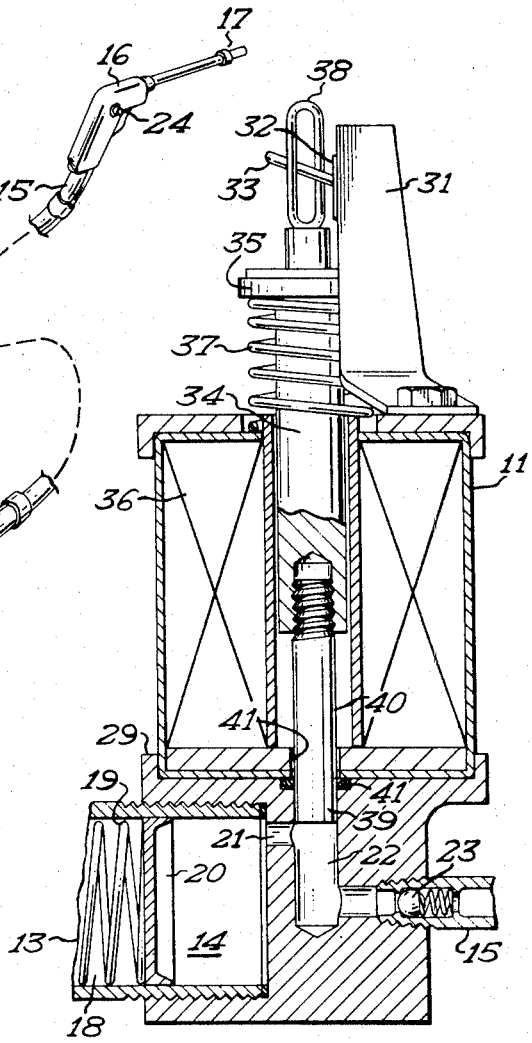

Fig 3

INVENTORS
JAMES H. COX
BY EDWIN B. EISENEGGER
Williamson & Palmatier
ATTORNEYS