F. E. BEST.

LOCK.

APPLICATION FILED AUG. 28, 1919.

1,384,022.

Patented July 5, 1921.

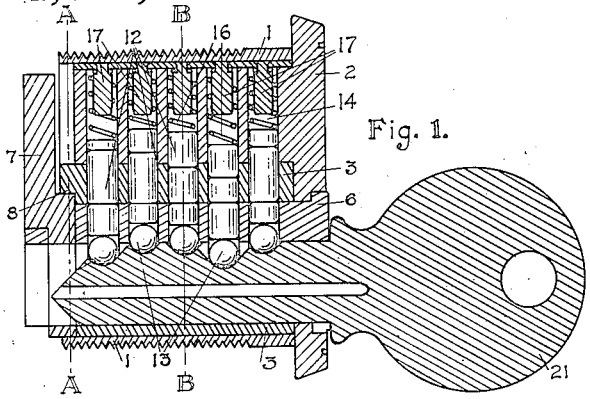

Fig. 1.

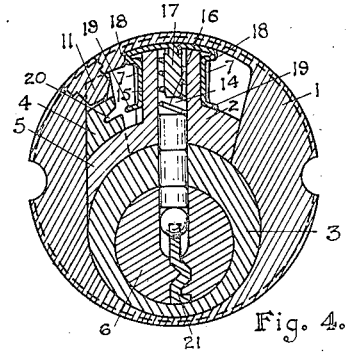

Fig. 4.

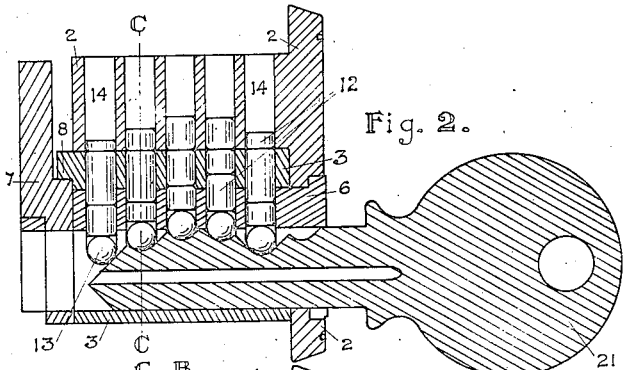

Fig. 2.

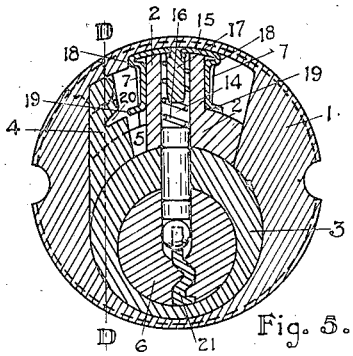

Fig. 5.

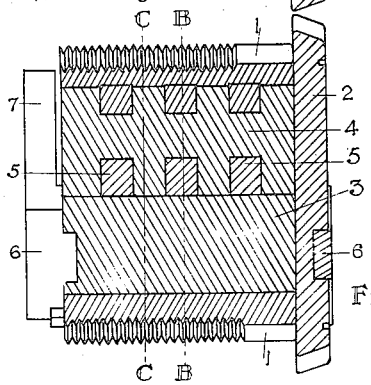

Fig. 3.

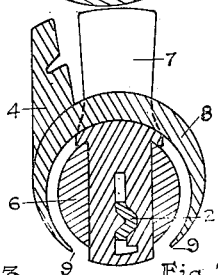

Fig. 7.

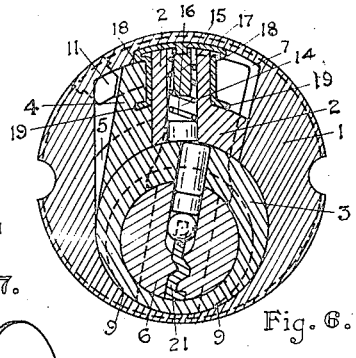

Fig. 6.

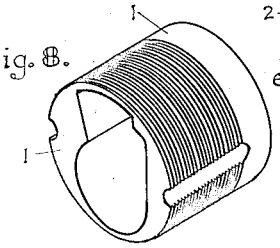

Fig. 8.

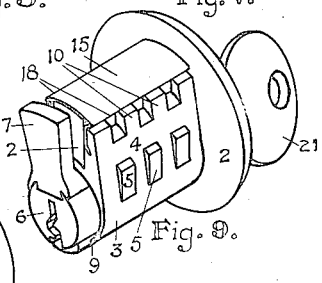

Fig. 9.

Frank Ellison Best,

Inventor.