Jan. 20, 1959 B. CRETIN-MAITENAZ 2,869,422

MULTIFOCAL LENS HAVING A LOCALLY VARIABLE POWER

Filed Nov. 23, 1954 3 Sheets-Sheet 1

Fig.1.

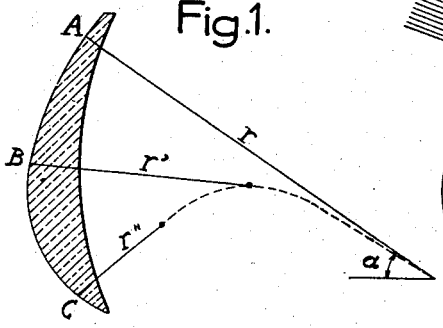


Fig.2.

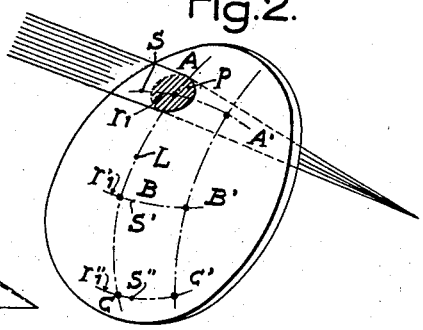


Fig.3.

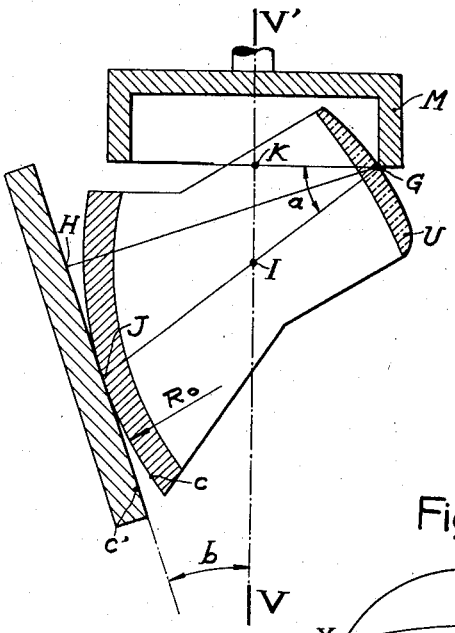


Fig.4.

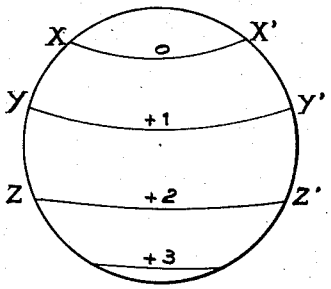

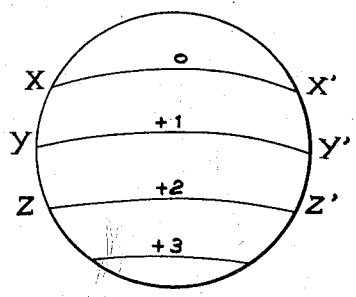
Fig.5.