R. L. GORDON.

LENS.

APPLICATION FILED NOV. 24, 1917.

T2015

1,269,422.

Patented June 11, 1918.

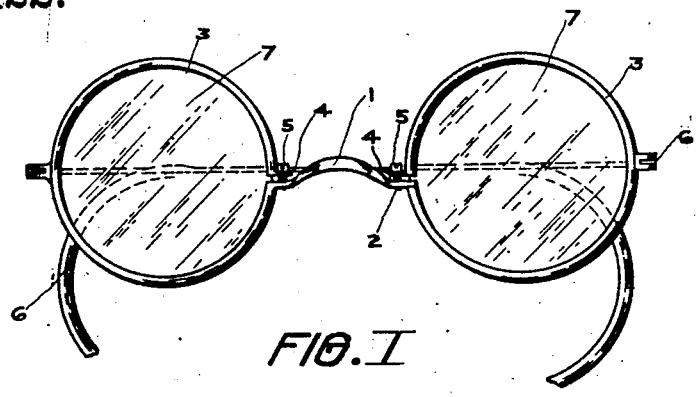

FIG. I

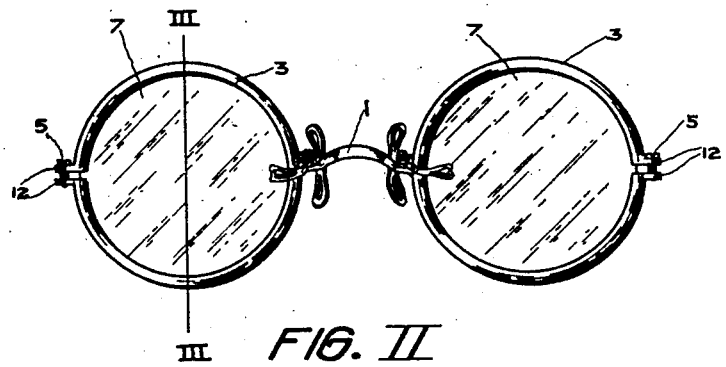

FIG. II

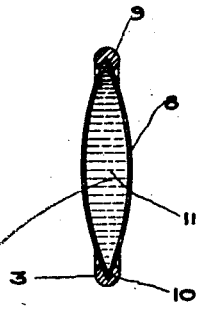

FIG. III

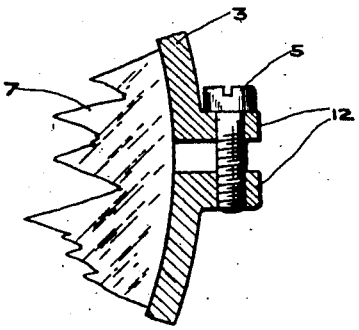

FIG. IV

Fluid Variable focal lengths

INVENTOR
ROBERT L. GORDON

BY
H. H. Styll & H. K. Parsons
ATTORNEYS