US00D744022S

(12) United States Design Patent

Petty et al.

(10) Patent No.: US D744,022 S
(45) Date of Patent: ** Nov. 24, 2015

(54) **CAMERA**

(71) Applicant: **Blackmagic Design Pty. Ltd.**, Port Melbourne (AU)

(72) Inventors: **Grant Petty**, Melbourne (AU); **Simon Kidd**, Melbourne (AU); **Michael Cornish**, Melbourne (AU); **Stuart Elford**, Melbourne (AU); **Shannon Smith**, Melbourne (AU); **John Vanzella**, Melbourne (AU); **Andrew Howley**, Melbourne (AU); **Ryan Harper**, Melbourne (AU)

(73) Assignee: **Blackmagic Design Pty. Ltd.** (AU)

(**) Term: **14 Years**

(21) Appl. No.: **29/487,106**

(22) Filed: **Apr. 4, 2014**

(51) **LOC (10) Cl.** **16-01**

(52) **U.S. Cl.**
USPC **D16/202**; D16/203

(58) **Field of Classification Search**
USPC D16/200, 202–206, 208, 218, 219, 242; 348/373–376; 396/529–532, 535, 396/539–541
CPC G03B 17/02; G03B 19/04; G03B 17/56; G03B 17/04; G03B 15/03; G03B 17/14; H04N 5/2251; H04N 5/2252; H04N 5/2253; H04N 5/2254; G02B 7/02; G02B 7/04; G02B 7/14
See application file for complete search history.

(56) **References Cited**

U.S. PATENT DOCUMENTS

D563,450	S	*	3/2008	Cheng	D16/203
D566,150	S	*	4/2008	Sadatsuki	D16/202
7,466,360	B2	*	12/2008	Lee	348/373
D584,753	S	*	1/2009	Chung et al.	D16/202
D593,588	S	*	6/2009	Tsuchiya et al.	D16/202
D613,323	S	*	4/2010	Jang et al.	D16/202
D664,176	S	*	7/2012	Naoya	D16/202
D664,578	S	*	7/2012	Tanifuji et al.	D16/202
D675,240	S	*	1/2013	Narita et al.	D16/202
D689,110	S	*	9/2013	Euihoon et al.	D16/202
D696,328	S	*	12/2013	Nishiwaki et al.	D16/202
D698,381	S	*	1/2014	Arimoto et al.	D16/202
D698,846	S	*	2/2014	Isozaki	D16/219
D705,843	S	*	5/2014	Kawai	D16/202
2008/0180567	A1	*	7/2008	Mito et al.	348/373
2012/0134661	A1	*	5/2012	Ozaki	396/535

* cited by examiner

Primary Examiner — Adir Aronovich
Assistant Examiner — Ramzi Almatrahi
(74) *Attorney, Agent, or Firm* — Saidman DesignLaw Group, LLC

(57) **CLAIM**

The ornamental design for a camera, as shown and described.

DESCRIPTION

FIG. **1** is a top front perspective view of a camera showing our new design;
FIG. **2** is a top rear perspective view thereof;
FIG. **3** is a front elevation view thereof;
FIG. **4** is a top plan view thereof;
FIG. **5** is a rear elevation view thereof;
FIG. **6** is a bottom plan view thereof;
FIG. **7** is a right side elevation view thereof;
FIG. **8** is a left side elevation view thereof;
FIG. **9** is a bottom front perspective view thereof; and,
FIG. **10** is a bottom rear perspective view thereof.
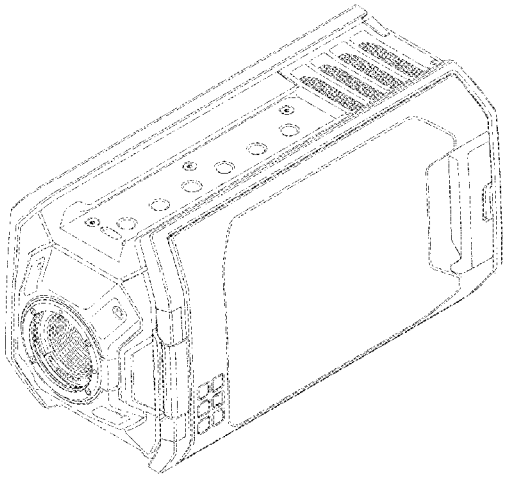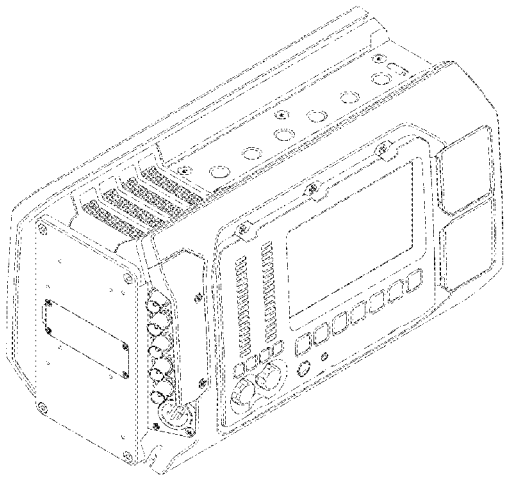
1 Claim, 10 Drawing Sheets