US009636222B2

(12) **United States Patent**
Oslund

(10) **Patent No.: US 9,636,222 B2**
(45) **Date of Patent: May 2, 2017**

(54) **PARAVALVULAR LEAK PROTECTION**

(71) Applicant: **St. Jude Medical, Cardiology Division, Inc.**, St. Paul, MN (US)

(72) Inventor: **John Oslund**, Blaine, MN (US)

(73) Assignee: **St. Jude Medical, Cardiology Division, Inc.**, St. Paul, MN (US)

(*) Notice: Subject to any disclaimer, the term of this patent is extended or adjusted under 35 U.S.C. 154(b) by 0 days.

(21) Appl. No.: **13/797,481**

(22) Filed: **Mar. 12, 2013**

(65) **Prior Publication Data**

US 2014/0277424 A1 Sep. 18, 2014

(51) **Int. Cl.**
A61F 2/24 (2006.01)

(52) **U.S. Cl.**
CPC ***A61F 2/2418*** (2013.01); *A61F 2250/003* (2013.01); *A61F 2250/0069* (2013.01)

(58) **Field of Classification Search**
CPC A61F 2/24; A61F 2/2409; A61F 2/2412; A61F 2250/0069; A61F 2250/007
USPC 623/1.26, 2.17, 2.18
See application file for complete search history.

(56) **References Cited**

U.S. PATENT DOCUMENTS

3,657,744	A	4/1972	Ersek
4,275,469	A	6/1981	Gabbay
4,491,986	A	1/1985	Gabbay
4,759,758	A	7/1988	Gabbay
4,878,906	A	11/1989	Lindemann et al.
4,922,905	A	5/1990	Strecker
4,994,077	A	2/1991	Dobben
5,411,552	A	5/1995	Andersen et al.
5,480,423	A	1/1996	Ravenscroft et al.
5,843,167	A	12/1998	Dwyer et al.
5,855,601	A	1/1999	Bessler et al.
5,935,163	A	8/1999	Gabbay
5,961,549	A	10/1999	Nguyen et al.
6,077,297	A	6/2000	Robinson et al.
6,083,257	A	7/2000	Taylor et al.
6,090,140	A	7/2000	Gabbay
6,214,036	B1	4/2001	Letendre et al.

(Continued)

FOREIGN PATENT DOCUMENTS

DE	19857887	A1	7/2000
DE	10121210	A1	11/2002

(Continued)

OTHER PUBLICATIONS

Catheter-implanted prosthetic heart valves, Knudsen, L.L., et al., The International Journal of Artificial Organs, vol. 16, No. 5 1993, pp. 253-262.

Is It Reasonable to Treat All Calcified Stenotic Aortic Valves With a Valved Stent?, 579-584, Zegdi, Rachid, MD, PhD et al., J. of the American College of Cardiology, vol. 51, No. 5, Feb. 5, 2008.

(Continued)

Primary Examiner — Christopher D Prone
Assistant Examiner — Christine Nelson
(74) *Attorney, Agent, or Firm* — Lerner, David, Littenberg, Krumholz & Mentlik, LLP

(57) **ABSTRACT**

A prosthetic heart valve includes a collapsible and expandable stent having a proximal end and a distal end, and a collapsible and expandable valve assembly, the valve assembly including a plurality of leaflets connected to at least one of the stent and a cuff. The heart valve further includes a conformable band disposed about the perimeter of the stent near the proximal end for filling gaps between the collapsible prosthetic heart valve and a native valve annulus.
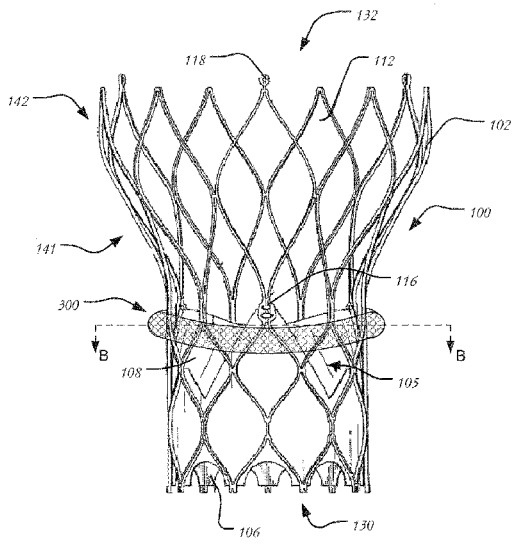
15 Claims, 9 Drawing Sheets