US009636122B2

(12) **United States Patent**
Chaney et al.

(10) **Patent No.: US 9,636,122 B2**
(45) **Date of Patent: May 2, 2017**

(54) **FEMORAL ORTHOPAEDIC INSTRUMENT ASSEMBLY FOR SETTING OFFSET**

(71) Applicant: **DEPUY IRELAND UNLIMITED COMPANY**, Co Cork Ot (IE)

(72) Inventors: **Rebecca L. Chaney**, Warsaw, IN (US); **Craig S. Tsukayama**, Fort Wayne, IN (US); **Joseph G. Wyss**, Warsaw, IN (US)

(73) Assignee: **DEPUY IRELAND UNLIMITED COMPANY**, Co Cork (IE)

(*) Notice: Subject to any disclaimer, the term of this patent is extended or adjusted under 35 U.S.C. 154(b) by 1027 days.

(21) Appl. No.: **13/832,194**

(22) Filed: **Mar. 15, 2013**

(65) **Prior Publication Data**

US 2014/0276837 A1 Sep. 18, 2014

(51) **Int. Cl.**

A61B 17/00	(2006.01)
A61B 17/17	(2006.01)
A61B 17/15	(2006.01)
A61B 17/16	(2006.01)

(52) **U.S. Cl.**

CPC ***A61B 17/1764*** (2013.01); ***A61B 17/155*** (2013.01); ***A61B 17/1675*** (2013.01); *A61B 17/164* (2013.01)

(58) **Field of Classification Search**

CPC A61F 2/389; A61F 2/461; A61F 2002/30594; A61F 2002/30884; A61F 2002/30897; A61B 17/1764; A61B 17/921

See application file for complete search history.

(56) **References Cited**

U.S. PATENT DOCUMENTS

5,356,414	A	10/1994	Cohen et al.	
5,681,316	A	10/1997	Deorio et al.	
7,497,874	B1	3/2009	Metzger et al.	
2008/0091273	A1	4/2008	Hazebrouck	
2008/0183177	A1	7/2008	Fox et al.	
2009/0125114	A1*	5/2009	May	A61B 17/1764 623/20.14
2009/0222008	A1	9/2009	Hogg et al.	
2012/0310246	A1*	12/2012	Belcher	A61B 17/155 606/80
2013/0325014	A1	12/2013	Sordelet et al.	
2013/0325016	A1	12/2013	Sordelet et al.	

(Continued)

FOREIGN PATENT DOCUMENTS

EP	2145590	A1	1/2010
FR	2748389	A1	11/1997

(Continued)

OTHER PUBLICATIONS

European Search Report, European Patent Application No. 14158601.6-1654 / 2777550, Oct. 24, 2014, 10 pages.

(Continued)

Primary Examiner — Matthew Lawson

(74) *Attorney, Agent, or Firm* — Barnes & Thornburg LLP

(57) **ABSTRACT**

A number of orthopedic surgical instruments for use in a surgical procedure to prepare a patient's femur to receive an orthopedic prosthesis. The tools include guide tools, cutting tools, surgical blocks, and other orthopedic surgical instruments configured to plan and guide the preparation of the patient's femur. A method of using the orthopedic surgical instruments is also disclosed.
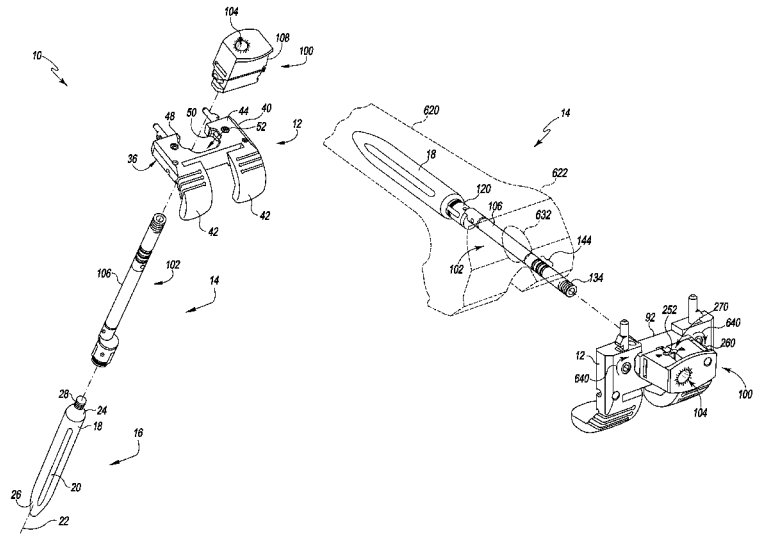
19 Claims, 30 Drawing Sheets