US005327322A

United States Patent [19]

Ma

[11] Patent Number: 5,327,322

[45] Date of Patent: Jul. 5, 1994

[54] BUILT-UP PEN BASE COMPUTER

[76] Inventor: Hsi-Kuang Ma, 4F, No. 48, Sec. 2, Chung Cherng Road, Taipei, Taiwan

[21] Appl. No.: 40,257

[22] Filed: Mar. 30, 1993

[51] Int. Cl.[5] H05K 7/10; G06F 1/16

[52] U.S. Cl. 361/681; 361/683; 345/905

[58] Field of Search 361/679-686; 312/223.2; 248/917-923; 364/708.1; 345/169, 905; 439/928

[56] References Cited

U.S. PATENT DOCUMENTS

5,030,128 7/1991 Herron et al. ..... 361/683 X

5,100,098 3/1993 Hawkins ..... 361/683 X

Primary Examiner—Leo P. Picard

Assistant Examiner—Michael W. Phillips

Attorney, Agent, or Firm—Bacon & Thomas

[57] ABSTRACT

A built-up pen base computer including a base, which comprises a flush type LCD mounted on a mother board and an IC card connected to the mother board at one side, and a case fitted into a rectangular bottom frame on the base and locked by spring-supported keys to carry a set of computer peripheral equipment being respectively and electrically connected to a connector detachably connected to a connector on the mother board, the rectangular bottom frame having a slot aligned with the disk slot of a floppy disk drive fastened inside the case.
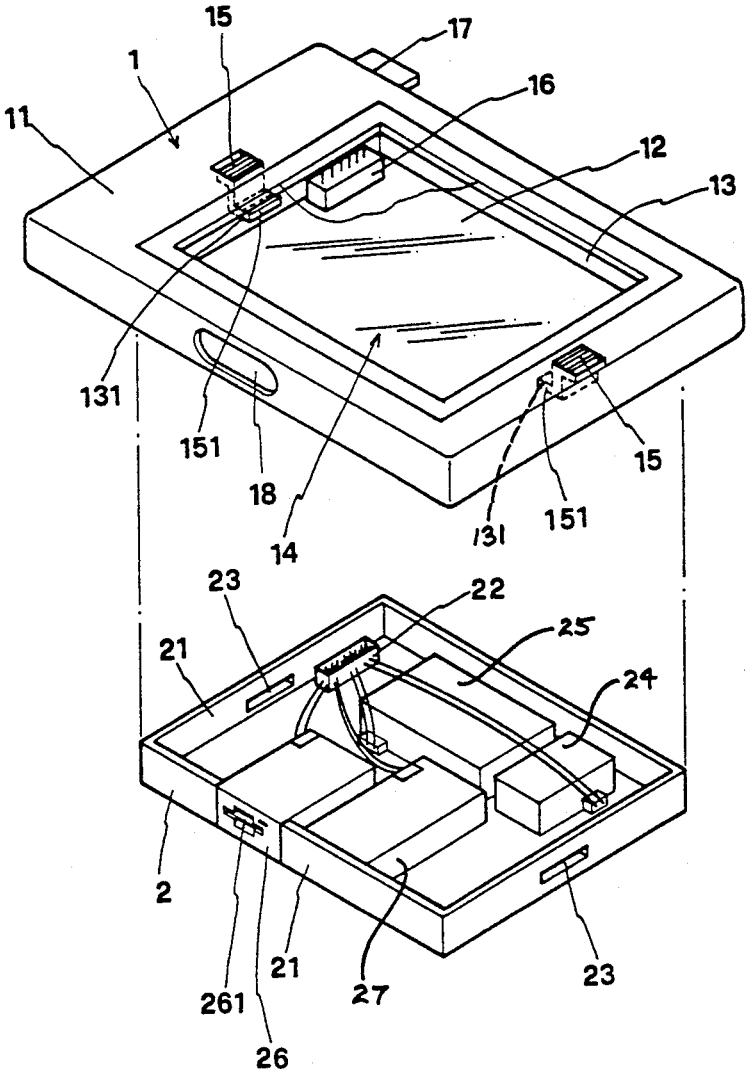
3 Claims, 1 Drawing Sheet