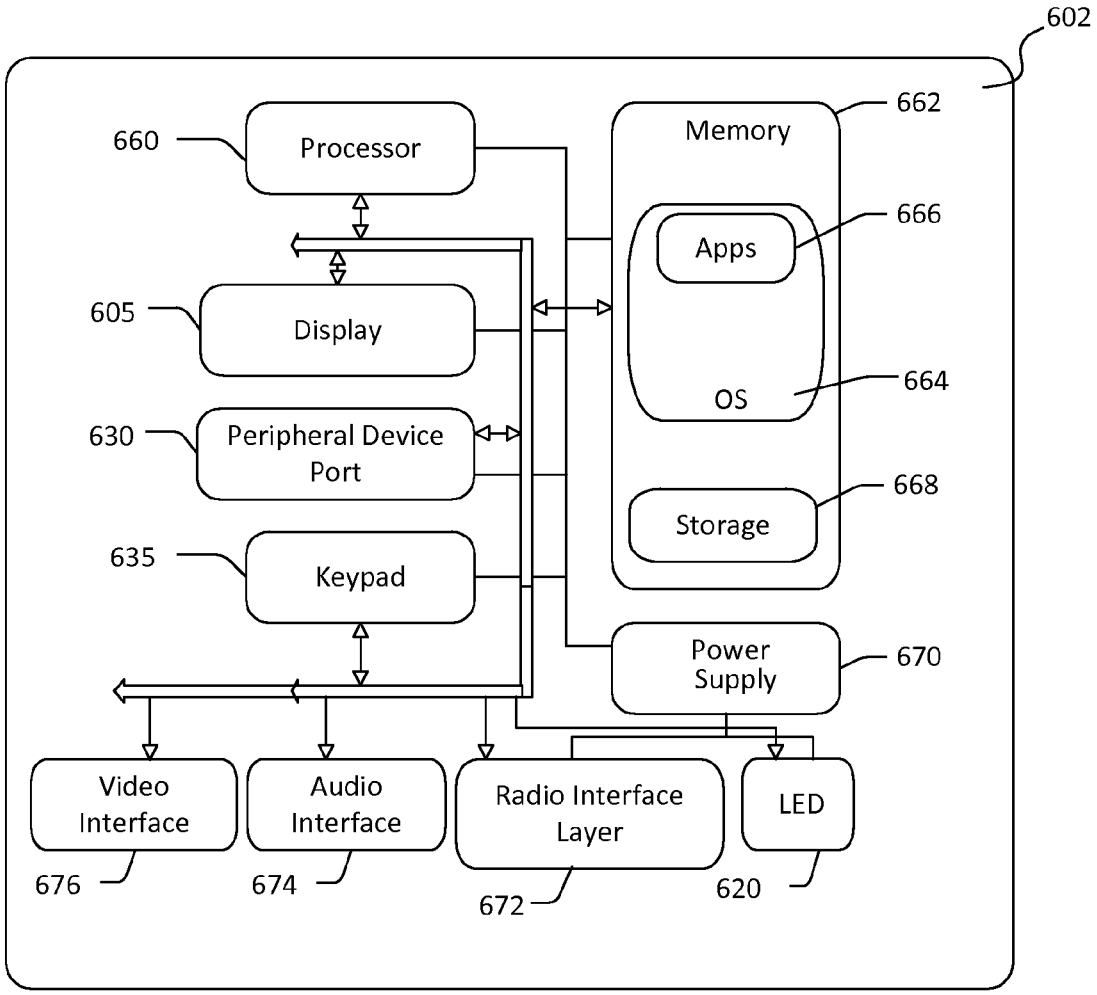
602
660
Processor
Memory
662
Apps
666
605
Display
OS
664
630
Peripheral Device Port
Storage
668
635
Keypad
Power Supply
670
Video Interface
Audio Interface
Radio Interface Layer
LED
676
674
672
620

Fig. 6B