Dec. 17, 1935. C. H. O. WITTIG 2,024,322

TELESCOPE GOGGLES

Filed Sept. 29, 1934 2 Sheets-Sheet 1

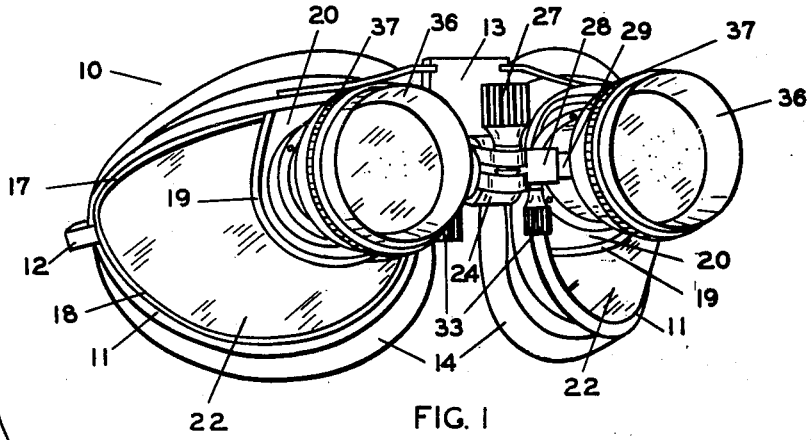

FIG. 1

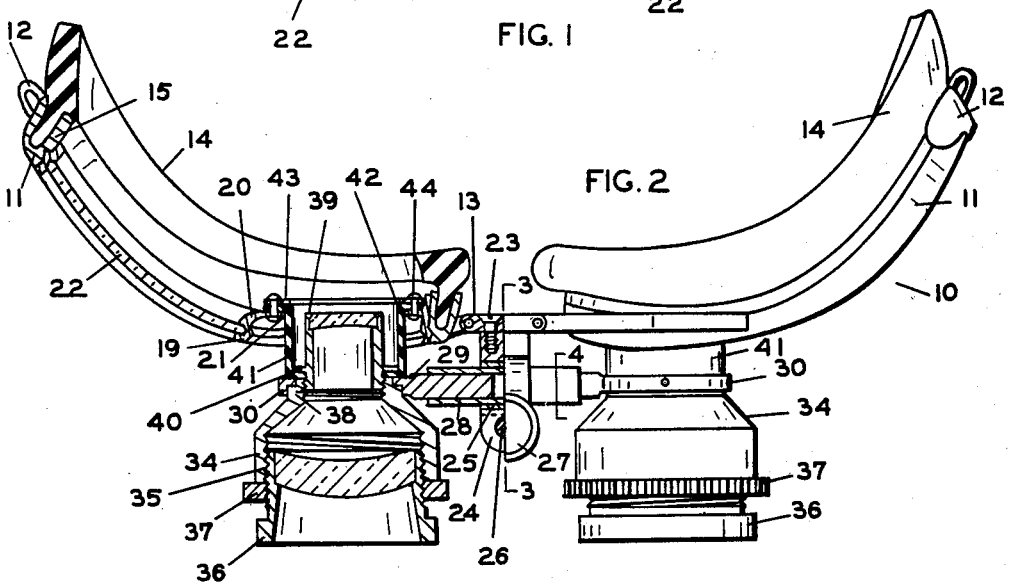

FIG. 2

FIG. 3

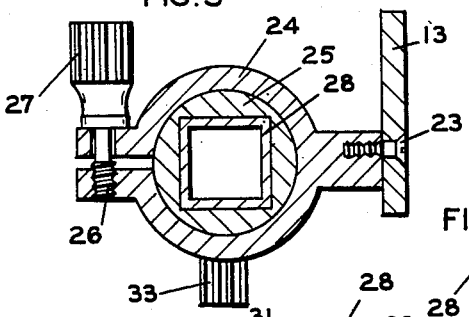

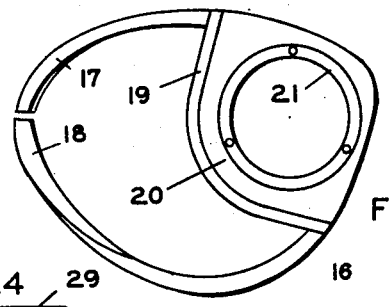

FIG. 6

FIG. 4

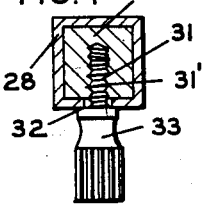

FIG. 5

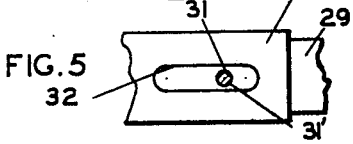

CARL H. O. WITTIG
INVENTOR

BY G. A. Ellestad
ATTORNEY