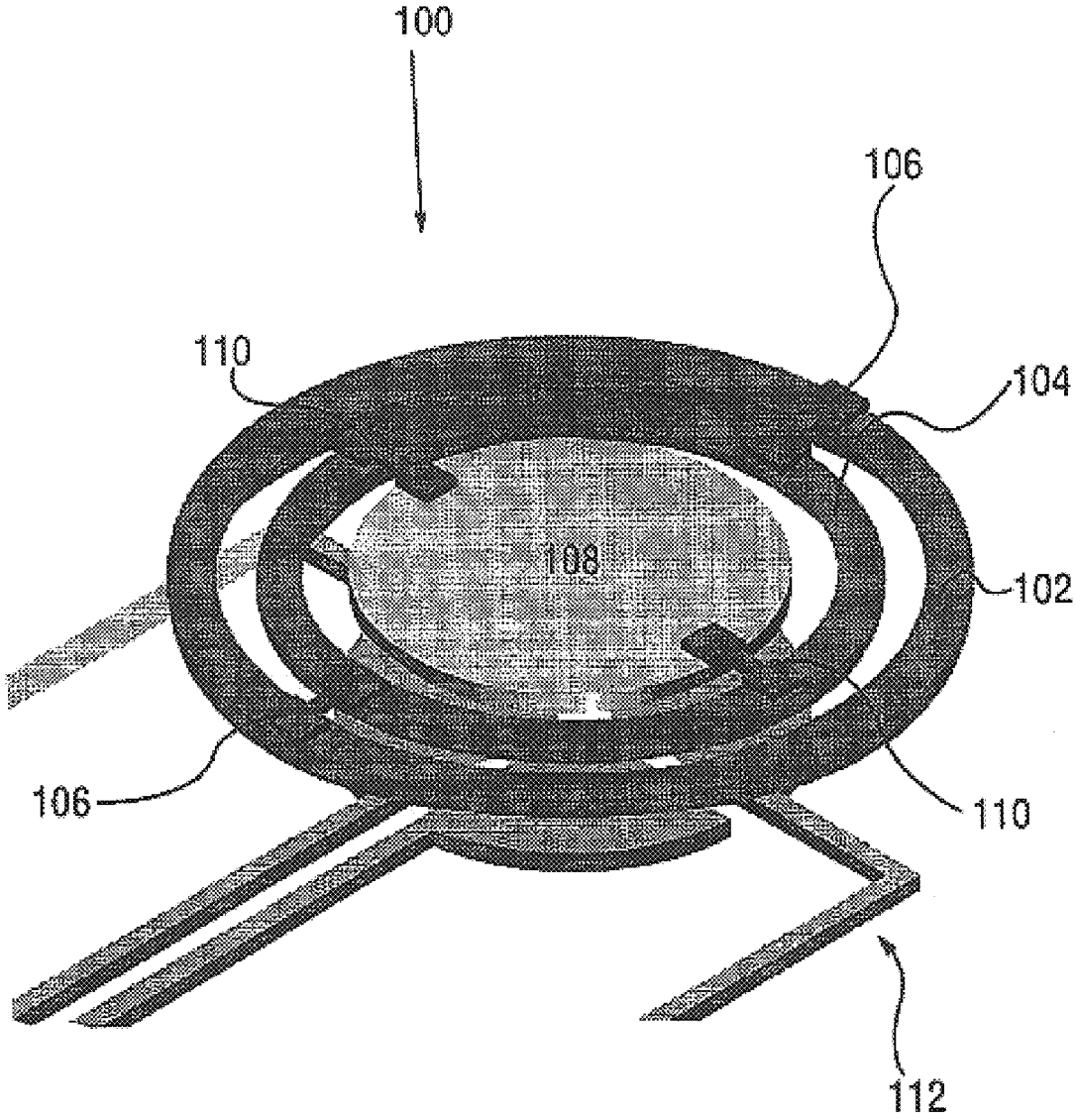

Fig. 1 (Prior Art)