Oct. 22, 1940. I. B. NEWBERY 2,218,922

VAPORIZER FOR COMBUSTION ENGINES

Filed June 29, 1938 2 Sheets-Sheet 1

Fig. 1.

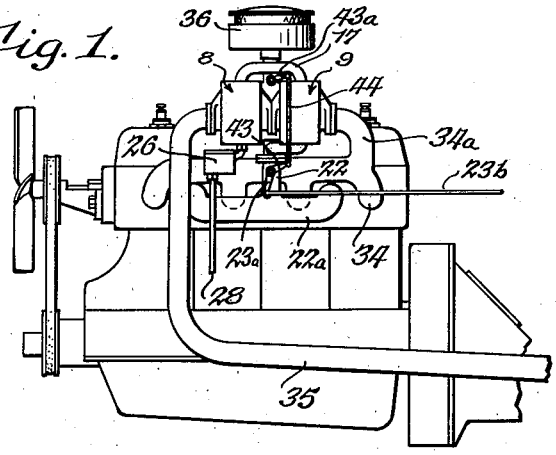

Fig. 2.

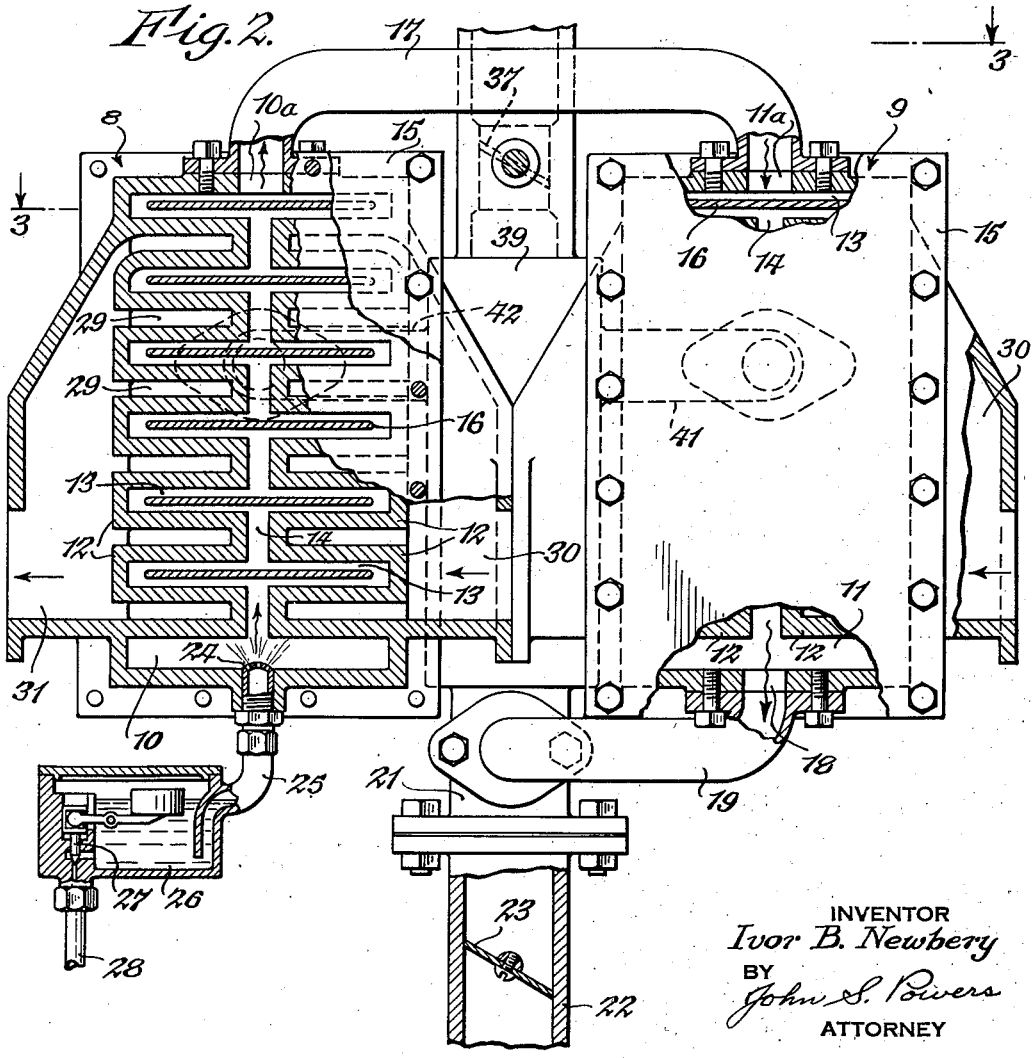

INVENTOR
Ivor B. Newbery
BY
John S. Powers
ATTORNEY